REV.	Description	REV.	Description
0.0	V0.0 首次发行		
	陈珍珍 2024/7/11		
1.0	调整成模板格式 修改澳洲地址		
	陈珍珍 2024/10/23		
2.0	修改 Battery Handling Guide（不要将电池存放在 131° F/55° C 以上温度）		
	李杭钊 2024/12/20		
2.0	增加优化器版，修改型号名、不同型号名及参数区分修改、介绍内容修改		
	钱青 2025/04/15		

品名	说明书 TSYS-HS51 英文版 SolaX 02 版		
料号	320101115702		
单位	mm	页次	

浙江艾罗网络能源技术股份有限公司
SolaX Power Network Technology (Zhejiang) Co., Ltd.



技术要求：

1. 封面封底 157g 铜版纸覆哑膜彩打，内部纸 80g 双胶纸黑白印刷，正反打印；
2. 装订方式：胶装或骑马钉，内页大于 60 页时须胶装；
3. 未注尺寸公差按 ±3 mm；
4. 图面、字体印刷清晰、无偏移、无毛边、不起边、油墨不脱落；
5. 黑色字体颜色为 PANTONE BLACK C, 无边框，底色为白色；
6. 符合 RoHS 要求。

品名	说明书 TSYS-HS51 英文版 SolaX 02 版	设计	钱 青 2025/04/15
		审核	刘先冬 2025/04/15
材料	NA	核准	施鑫淼 2025/04/15
料号	320101115702	浙江艾罗网络能源技术股份有限公司	
单位	mm 页次		

BY SOLAX TRIPLE POWER



TSYS-HS51

User Manual

Version 2.0

www.solaxpower.com

eManual in the QR code or at http://kb.solaxpower.com/

STATEMENT

Copyright

Copyright © SolaX Power Network Technology (Zhejiang) Co., Ltd. All rights reserved.

No part of this manual may be reproduced, transmitted, transcribed, stored in a retrieval system, or translated into any language or computer language, in any form or by any means without the prior written permission of SolaX Power Network Technology (Zhejiang) Co., Ltd.

Trademarks

BY SOLAX TRIPLE POWER and other symbol or design (brand name, logo) that distinguishes the products or services offered by SolaX has been trademark protected. Any unauthorized use of above stated trademark may infringe the trademark right.

Notice

All or part(s) of the products, features and services described in this document may not be within your scope of purchase or usage. Unless otherwise specified in the contract, the contents, information and recommendations in this document are provided as is, SolaX makes no kind of warranties, guarantees or representations expressly or implicitly.

The content of the documents is continually reviewed and amended, where necessary. However, discrepancies cannot be excluded. SolaX reserves the right to make improvements or changes in the product(s) and the program(s) described in this manual at any time without the prior notice.

The images contained in this document are for illustrative purposes only and may vary depending on product models.

Please visit the website www.solaxpower.com of SolaX Power Technology (Zhejiang) Co., Ltd. for more information.

SolaX reserves all the right for the final explanation.

About This Manual

Scope of Validity

This manual is an integral part of TSYS-HS51. It describes the transportation, storage, installation, electrical connection, commissioning, maintenance and troubleshooting of the product. Please read it carefully before operating.

Model Code

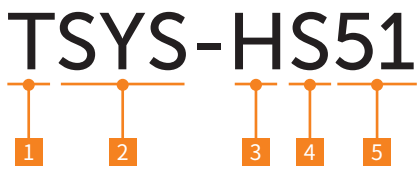

No.	Definition	Description
1	T	Product type: Triple Power
2	SYS	Battery system
3	H	Grid grade: High-voltage system
4	S	Stackable product
5	51	Battery capacity: 5.1 kWh

Target Group

The installation and maintenance setting can only be performed by qualified personnel who:

- Are licensed and/or satisfy state and local jurisdiction regulations;
- A medium-voltage operator is required to obtain any Certifications for High-voltage Electrician.

Conventions

The symbols that may be found in this manual are defined as follows.

Symbol	Description
DANGER	Indicates a hazardous situation which, if not avoided, will result in death or serious injury.
WARNING	Indicates a hazardous situation which, if not avoided, could result in death or serious injury.
CAUTION	Indicates a hazardous situation which, if not avoided, could result in minor or moderate injury.
NOTICE!	Provides tips for the optimal operation of the product.

Change History

Version 0.0 (2025-04-14)

Updated 2.1 Introduction (Modified the content, added the NOTE.)

Updated Table 2-2 (Distinguished between the model name and the weight.)

Updated Table 4-1/4-2/4-3/4-4 (Distinguished between the model names and modified the weights.)

Updated Table 5-1 (Distinguished between the model names.)

Updated 12 Technical Data (Distinguished between the model names.)

Version 0.0 (2025-02-26)

Initial release

Table of Content

1 Safety 1

1.1 General Safety 1
1.2 Battery Safety 2
1.3 Electrical Safety 5

2 Product Overview 8

2.1 Introduction 8
2.2 Product Appearance 9
2.2.1 System Introduction 9
2.2.2 Parts Introduction 11
2.3 Indicator Panel 15
2.3.1 BMS Indicators 15
2.3.2 Battery Pack Indicator 18
2.4 Black Start 19
2.5 DIP Switch 19
2.6 Label 21
2.7 Explanation of Symbols and Icons 21

3 Transportation and Storage 23

3.1 Transportation Requirements 23
3.2 Storage Requirements 24

4 Preparation before Installation 26

4.1 Selection of Installation Location 26
4.1.1 Environment Requirement 26
4.1.2 Installation Carrier Requirement 27
4.1.3 Clearance Requirement 27
4.2 Installation Option 29
4.3 Tools Requirement 32
4.4 Additionally Required Materials 33

5 Unpacking and Inspection 34

5.1 Unpacking 34
5.2 Scope of Delivery 35

6 Installation and Wiring about One Tower 38

6.1 Installation Procedure about One Tower 38
6.2 Electrical Wiring 49

6.2.1 PE Connection 50
6.2.2 Communication Connection 52
6.2.3 Cable Connection between BMS and Inverter 54
7 Installation and Wiring about Two Towers 61
7.1 Installation Procedure about Two Towers 61
7.2 Electrical Wiring 73
7.2.1 PE Connection 74
7.2.2 Communication Connection 77
7.2.3 Cable Connection among BMS, Series Box/Series box (TB-HS51O) and Inverter 79
8 System Commissioning 88
8.1 Checking before Power-on 88
8.2 One-cluster System Power-on 88
8.3 One-cluster System Power-off 89
9 Capacity Expansion and Parallel Connection 92
9.1 Capacity Expansion 92
9.2 Parallel Connection 98
10 Troubleshooting and Maintenance 99
10.1 Maintenance 99
10.2 Troubleshooting 100
11 Decommissioning 103
11.1 Disassembly of Cables 103
11.2 Packing 105
12 Technical Data 106

1 Safety

1.1 General Safety

Before transporting, storing, installing, operating, using and/or maintaining the device, please carefully read and understand the document, and strictly follow the instructions and safety precautions given herein, as well as symbols affixed on the device. The safety instructions herein are only supplements to local laws and regulations.

The operator should not only abide by all safety precautions provided in the document, including but not limited to the “Danger” sign, "Warning" sign, "Caution" sign, and "Notice" sign, but also comply with relevant international, national and local laws, regulations, standards, guidelines and industry rules in the process of transportation, storage, installation, operation, and maintenance. SolaX will not assume any responsibilities for the loss caused by improper operation, or violation of safety standards for design, production and equipment suitability.

SolaX will not be liable for maintenance for possible device failure, device malfunction, or parts damage, nor will the company assume any liability to pay compensation for the possible physical and property damage resulting from the installation environment that does not meet the design requirements.

The device is well designed and tested to meet all applicable state and international safety standards. However, like all electrical and electronic equipment, safety precautions must be observed and followed during the installation of the device to reduce the risk of personal injury and to ensure a safe installation.

SolaX will not assume any responsibilities if any of the following circumstances occur, including but not limited to:

- Device damage due to force majeure, such as earthquake, flooding, thunderstorm, lighting, fire hazard, volcanic eruption, war, typhoon, tornado, etc.
- Device damage due to human causes.
- Device used or operated against local policy or regulations.
- Failure to follow the operation instructions and safety precautions on the product and in this document.
- Installation and use under improper environment or electrical condition.
- Unauthorized modifications to the product or software.
- Device damage caused during transportation by the customer or the third party.
- Battery damage caused by strong vibrations from external factors before, during and after installation.
- Storage conditions that do not meet the requirements specified in this document.
- Use of incompatible inverters or devices.
- Installation and commissioning operated by unauthorized personnel who are not licensed and /or satisfy state and local jurisdiction regulations.

1.2 Battery Safety

DANGER!

- Do not connect the positive and negative poles of a battery together. Otherwise, it may be short-circuited. This will result in an excessive flow of current and large quantities of energy for a short time, and then will cause battery leakage, smoke, the emission of flammable gases, thermal runaway, fire, or even an explosion. Therefore, the battery must be powered off before maintenance.
- If a battery is overheated, it will cause leakage, smoke, release of flammable gases, thermal runaway, fire, or even an explosion. Therefore, please ensure that the installation site shall be well ventilated and kept away from high temperatures.
- Do not dismantle, change, shake, drop, crush, impact, cut, penetrate with a sharp object, or any other ways to damage the battery. Otherwise, it may cause leakage, smoke, emission of flammable gases, thermal runaway, fire, or even an explosion.
- Do not mix different types or makes of the battery. Otherwise, it may cause leakage or rupture, resulting in personal injury or property damage.
- The battery electrolyte is toxic and volatile. Never get in contact with the leaked liquids or inhale gases in the case of the battery leakage or odor, and contact professionals immediately. The professional must wear PPE (including but not limited to safety glasses, safety gloves, gas masks, and protective clothing) before powering off the device, and then contact our company at once after removing the damaged battery.
- Normally, the battery will not release any gases. However, in the following situations: burnt, needle-pricked, squeezed, struck by lightning, overcharged, or subject to other adverse conditions that may cause battery thermal runaway, the battery may be damaged or an abnormal chemical reaction may occur inside the battery, resulting in electrolyte leakage or production of gases. If the battery needs to exhaust flammable gas, safe emission measures must be taken to prevent fire and device corrosion.
- Do not use damaged batteries.

WARNING!

- Please read the document carefully before installation, operation and maintenance.
- Must arrange fire-fighting equipment in advance according to the local laws, regulations, and standards while installing and commissioning the device.
- Please check that there is no damage to the outer packaging before and after unpacking, and in the process of storage and transportation. The battery shall be correctly placed or stacked in accordance with the requirements stipulated on the labels to prevent damaging or scrapping the battery resulting from crushing or falling.
- Must tighten screws securing cables and on the copper bars according to the torque information specified in the document, and check whether they are tightened periodically. For instance, whether there is any rust, corrosion, or any other foreign object on it, and then clean it up if any. Because the loose screw connections may result in excessive voltage drops and large currents, leading to generating a lot of heat and burning the battery.

WARNING!

- The battery should be charged in time after discharge, to prevent battery damage due to overdischarge. If a battery pack is stored for a long time, please periodically recharge it to protect it from damage according to the storage requirements specified in the document.
- Please charge the battery within the specific temperature range because the low temperature may result in a short circuit. Hence, do not charge it when the temperature is below the low limit of the operating temperature.
- Do not use the battery when you find a bulge, or dents on the battery housing, and contact the installer or professional maintenance personnel to dismantle and replace it. The damaged battery must be kept away from other devices and flammable and explosive articles, and do not contact it except for professionals.
- Before operation, ensure that there are no irritating or burning smells around the battery.
- Do not weld or grind near a battery. Because electric sparks or arcs may cause fires.
- Do not step, lead, stand, or set on the battery.

CAUTION!

- It has the IP66 ingress protection, which allows it to be installed outdoor. If the battery packs are installed outdoors, the precautions against direct sunlight, rain exposure and snow accumulation are recommended. Exposure to direct sunlight raises the temperature inside the battery. This temperature rise poses no safety risks, but may impact the battery performance.

NOTICE!

Transportation requirements for battery:

- Relevant qualifications for the transport of dangerous goods must be obtained by the forwarding agent engaged in such businesses, and they must strictly abide by the local regulations for the transport of dangerous goods.
- Please check the battery before transportation. If a battery leaks, smells, or is damaged, do refuse to transport it.
- Please handle gently in the process of loading and unloading, transportation, and moving a battery to prevent bumping, and take effective moisture-proof measures to prevent personal injuries and battery damage.
- Unless otherwise specified, do not transport the batteries, which are classified as dangerous goods, together with food, medicine, or other additives on the same means of transport.

NOTICE!

If the battery leaks electrolyte or any other chemical materials, the electrolyte leakage can lead to toxic gases. Therefore, do not contact with them at all times. In case of accidentally coming into contact with them, please do as follows:

- In case of inhalation: Leave the contaminated area immediately, and seek medical attention at once;
- In case of contact with eyes: Rinse eyes with running water for at least 15 minutes, and seek medical attention;
- In case of contact with skin: Wash the contact area thoroughly with soap, and seek medical attention;
- In case of ingestion: Induce vomiting, and seek medical attention.

If a fire breaks out where the battery is installed, please do as follows:

- In case a battery is charging when the fire breaks out, provided it is safe to do so, press the emergency stop button and unplug the power cable;
- In case a battery is not on fire yet, use a water-based fire extinguisher or a carbon dioxide extinguisher to extinguish the fire;
- In case a battery catches fire, do not try to put it out, and evacuate immediately;
- A battery may catch fire when it is heated above 150°C/302°C. If the battery catches fire, please evacuate immediately since it will generate noxious and poisonous gases.

Recovery of damaged or wasted battery:

- Dispose of the damaged or wasted batteries according to local laws and regulations instead of placing them in the household trash or curbside recycling bins. Otherwise, it may cause environmental pollution or explosions.
- Ensure that the damaged or wasted batteries are not exposed to the following situations: high temperatures, high humidity, direct sunlight, or corrosive environments.
- Contact a battery recycling company to scrap the battery, which leaks electrolytes, or is damaged or expired.
- Please take protective steps to prevent battery short circuits before moving batteries.
- Please keep away from flammable material storage areas, residential areas, and other population centers when transporting and storing the damaged battery.

1.3 Electrical Safety

DANGER!

- Please make sure that the unit is free from any damage before the electrical connection.
- Do not modify, change, or dismantle the device.
- Do not change the power-on and power-off sequences and the installation procedure written in the document, and please properly and correctly operate it.
- Do not power on the device during installation. Otherwise, it may cause a fire, personal injury, or device damage.
- Must remove earrings, rings, bracelets, watches, and any other metal jewelry before operation, to avoid electrical shock, burns, or even death.
- During operation, special insulated tools must be used to avoid electric shock or short circuit failure. The insulated tools' voltage ratings must exceed the system voltage ratings. Please refer to "12 Technical Data" for system information.

WARNING!

- Please wear PPE, such as, protective clothing, insulating shoes, goggles, safety helmets, insulating gloves, etc., when conducting electrical wiring.
- Please check that there is no damage to the outer packaging before unpacking. If damaged, do not use and contact the transporter and manufacturer immediately.
- Do not place installation tools, metal parts and other sundries on the battery while installing. Items on and around it need to be cleaned up in time after finishing installation.
- Do not install the battery in rain, snow, fog and other weather to avoid battery damage.
- If the battery is damaged or accidentally drenched in water, do not install and use it. Please transport it to a safety isolation point and contact the local fire department or professional technicians for scrapping.
- If the battery cables are submerged in water, do not approach, touch or use them.
- Ensure that the positive and negative terminals of the battery are not accidentally grounded. If accidental grounding occurs, disconnect the battery terminals from the ground immediately.
- Do not touch the power supply equipment directly, or through conductors or damp objects.
- Do not touch the parts of the equipment of which warning signs are attached, to avoid personal injury or device damage.

CAUTION!

- Do not power on the device until it has been installed and confirmed by professionals.
- In the event of a fire, evacuate immediately and call the local fire services.

NOTICE!

General requirement:

- Please operate according to the safety code for power station.
- Please make sure that the equipment and its associated switches are off before connecting and disconnecting power cables.
- Please check whether the protective housing and insulating sleeve for an electrical component have been installed correctly after finishing installation, to avoid electric shock.
- Must turn off the output switch of the power supply equipment when maintaining its electrical terminal device and power distribution device.
- If the device is required to be powered off during troubleshooting and diagnosis, please do as the following procedure: power off > electricity testing > connecting grounding cable > hanging warning signs and setting up guardrails.
- Must hang up "Do Not Switch On" warning signs on the relevant switches or circuit breakers before completing maintenance, to prevent power connection. Do not switch on before the fault is solved.
- Do not use water, alcohol, oil, or other solvents when cleaning electrical components inside and outside the device.

Grounding requirement:

- The device's grounding impedance shall meet the requirements of local electrical safety standards.
- The equipment shall be permanently connected to a grounding wire within the building's electrical system. Please check whether the device is reliably grounded before operation. The grounding cable should be removed last while dismantling and maintaining the device.
- Do not start the device if it is not fitted with a grounding conductor.
- All acts against the grounding conductor are prohibited.
- If the device is equipped with a three-pronged socket, make sure that the ground prong is reliably grounded.
- For the device that may generate large contact currents, please make sure that the grounding terminal on the housing has been grounded before powering on, to avoid electric shock.

Cable requirement:

- When deciding the wire diameter, and connecting or wiring cables, follow the local laws, regulations, and codes to ensure safety.
- Before connecting power cables, please make sure that the cable labels are correctly labelled and the cable terminals are well insulated.
- Do not loop and twist cables while conducting electrical wiring. If the length of the power cable is not enough, please replace it instead of joining or welding. Ensure that all the cables of the correct type and size are fully connected and well insulated, and the edges of cable slots and crossing holes are smooth.
- Cables should be kept away from heaters or other heat sources, because a high temperature environment may result in aging and damage to cable insulation.

NOTICE!

Short circuit protection:

- Please use electrical tape to wrap the bare conductor cables to prevent short circuits when installing and maintaining the battery.
- Prevent any object from entering into batteries, which may cause a short circuit.
- Regularly check the screws or copper bars on the device, to ensure that they are fully tightened.

2 Product Overview

2.1 Introduction

TSYS - HS51 is an intelligent household energy storage battery system that is easy to install and expand. It is composed of a BMS (Battery Management System), battery pack, base, and series box (if any). Additionally, it supports an optional energy optimizer to achieve active balancing function. This battery adopts advanced technological manufacturing processes, and features high reliability and convenient control, making it suitable for home and small-scale commercial and industrial scenarios.

- A battery management system (hereinafter referred to as BMS) is an electronic system that manages a rechargeable battery.
- A battery module is a type of electrical battery which can charge or discharge loads.
- Series Box is designed to connect the second tower in series.

NOTE: If a cluster of batteries mixes versions with and without an energy optimizer, the energy optimizer function will not take effect.

2.2 Product Appearance

2.2.1 System Introduction

System appearance

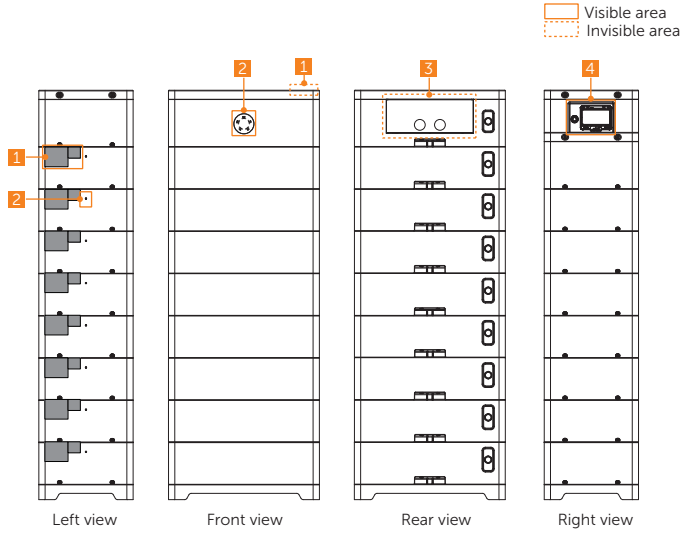

Figure 2-1 Appearance

Table 2-1 Description

No.	Item	Description
1	Labels	Including performance label, which clearly identifies the device type, serial number, parameters, certification, etc., and manufacturer label describing name and address of manufacturer. Please refer to "2.6 Label" for details.
2	Indicator panel	Provide a human-readable indication of an instrument signal. For details, please refer to "2.3 Indicator Panel" for details.
3	Electrical connection area	Including B+/B- ports, communication port, heat port, grounding port, etc. Please refer to for "Introduction of BMS" details.
4	Button/Breaker	Power on or off the system.

Weight and dimension

Table 2-2 Weight and dimension

	BMS (TBMS-S51-8/ TBMS-S51-8O)	Battery Pack (TB-HS51/TB-HS51O)	Base	Series Box/Series box(TB-HS51O)
Length (mm)	600	600	600	600
Depth (mm)	376	376	376	376
Width (mm)	225	168	60	225
Net weight (kg)	18.4	47/47.1	5	14.6

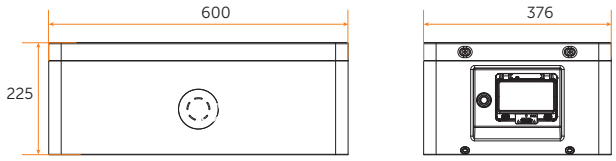

Figure 2-2 BMS

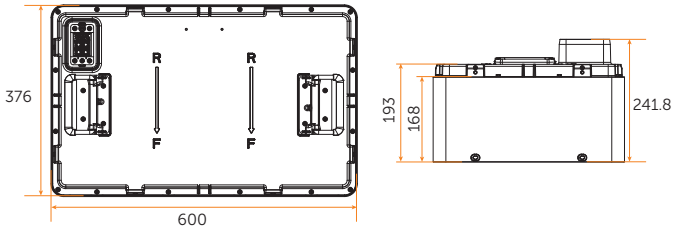

Figure 2-3 Battery pack

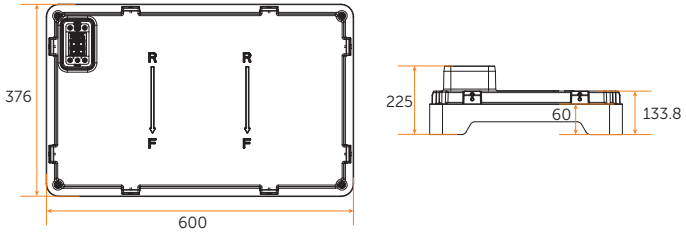

Figure 2-4 Base

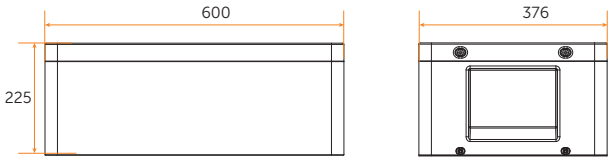

Figure 2-5 Series box/Series box(TB-HS51O)

2.2.2 Parts Introduction

Introduction of BMS

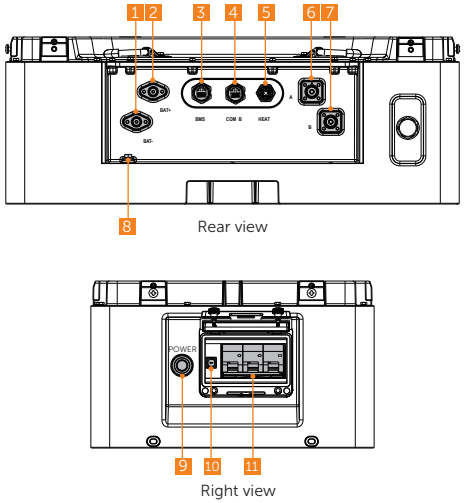

Figure 2-6 Introduction of BMS

Table 2-3 Introduction of BMS

NO.	Item	Description
1	BAT- port	Negative power port: to connect to the "BAT-" port of the inverter.
2	BAT+ port	Positive power port: to connect to the "BAT+" port of the inverter.
3	BMS port	Communication port: to connect to the "BMS" port on the inverter.
4	COM B port	Communication port: to connect to the "COM B" port of the series box/series box(TB-HS51O) (if any); or doesn't need to be connected.

NO.	Item	Description
5	HEAT port	Heater port: to connect to the "HEAT" port of the series box/ series box(TB-HS51O) (if any); or a short-circuit plug must be inserted into the port. **(The HEAT port of the TB-HS51O has two more BUS cables than the HEAT port of the TB-HS51.)**
6	A port	Positive power port: to connect to the "A" port of the series box/ series box(TB-HS51O).
7	B port	Negative power port: to connect to the "B" port of the series box/ series box(TB-HS51O).
8	GND port	Grounding port: to connect to the grounding port of the inverter and series box/series box(TB-HS51O) (if any).
9	POWER button	To start/shut down system
10	DIP SWITCH	Realize battery's parallel function (a reserved function). Please refer to "2.4 DIP Switch" for details.
11	Breaker	To control the input and output of the battery pack.

Introduction of battery pack

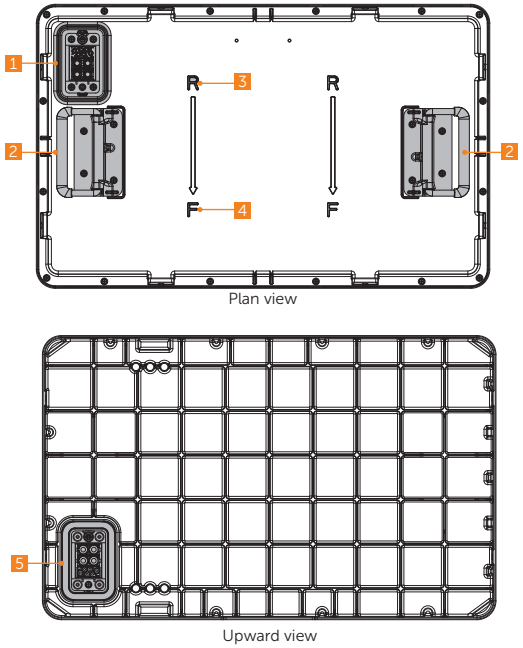

Figure 2-7 Introduction of battery pack

Table 2-4 Introduction of BMS

NO.	Item	Description
1	Connector	To connect to the bottom of the battery pack or BMS.
2	Handles	/
3	"R"	Refer to rear side.
4	"F"	Refer to front side.
5	Connector	To connect to the battery pack or base.

NOTICE!

- Due to the weight of the battery pack, it is suggested to arrange for 2 people to move or lift it.

Introduction of base

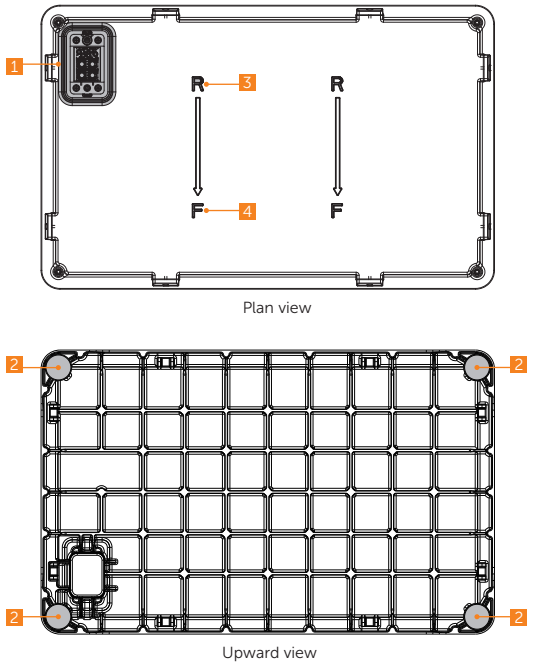

Figure 2-8 Introduction of base

Table 2-5 Introduction of base

NO.	Item	Description
1	Connector	To connect to the bottom of the battery pack.
2	Adjustable screw	To rotate the screws to keep the base even.
3	"R"	Refer to rear side.
4	"F"	Refer to front side.

Introductioin of series box/series box(TB-HS51O)

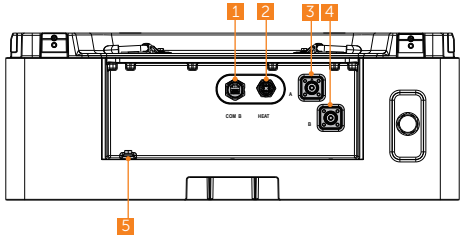

Rear view

Figure 2-9 Introduction of series box/series box(TB-HS51O)

Table 2-6 Introduction of series box/series box(TB-HS51O)

NO.	Item	Description
1	COM B port	Communication port: to connect to the "COM B" port of the BMS.
2	HEAT port	Heater port: to connect to the "HEAT" port of the BMS. **(The HEAT port of the TB-HS51O has two more BUS cables than the HEAT port of the TB-HS51.)**
3	A port	Positive power port: to connect to the "A" port of the BMS.
4	B port	Negative power port: to connect to the "B" port of the BMS.
5	GND port	Grounding port: to connect to the grounding port of the BMS.

2.3 Indicator Panel

2.3.1 BMS Indicators

The BMS is equipped with a tri-colour status light (yellow/green/red) and four single-colour SOC power indicators (green) to show its operating status. The SOC power indicators show the current battery percentage.

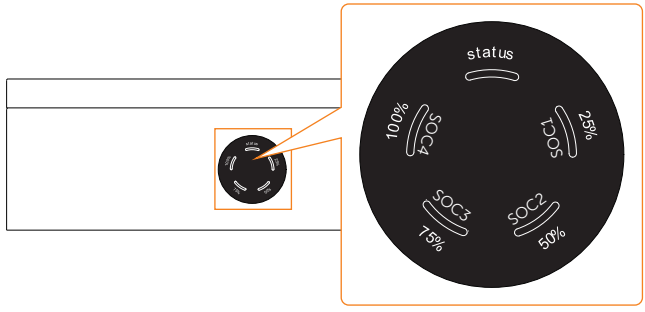

Front view

Figure 2-10 Indicators

Table 2-7 Information on indicators

Indication	LED	Colour	State
Start up	Status light	Yellow	Flash
	SOC power indicators	Green	Solid
Self-test	Status light	Yellow	Solid
	SOC power indicators	Green	Solid
Standby	Status light	Green	Solid
	SOC power indicators	Green	Solid
Charging	Status light	Green	Flash
	SOC power indicators	Please refer to "Indicators information while charging" for details.	
Discharging	Status light	Green	Flash
	SOC power indicators	Please refer to "Indicators information while discharging" for details.	
Shut down	Status light	Yellow	Solid
	SOC power indicators	Green	Solid

Indication	LED	Colour	State
Fault	Status light	Red	Flash
	SOC power indicators	Green	Solid
Normal power off	Status light	Green	Flash
	SOC power indicators	Green	Solid
Fault power off	Status light	Red	Flash
	SOC power indicators	Green	Solid
Black start	Status light	Please refer to "2.4 Black Start" for details.	
	SOC power indicators		

NOTICE!

- The battery system will assign each battery pack in a communication loop a unique address (battery number) during the "Start up" state. In the meantime, the status light comes on solid green, and the SOC indicators flash green based on the battery pack's actual battery capacity.

Indicators information while charging

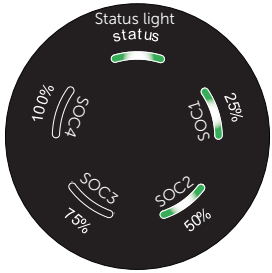

Figure 2-11 Indicator information while charging

If the battery level is between 25% and 50%, the SOC power indicators will show as follows:

- The first two SOC power indicators (SOC1 and SOC2) will flash green light;
- The SOC3 and SOC4 will be off.

Table 2-8 Indicator information while charging

SOC value	Status light	SOC1	SOC2	SOC3	SOC4
SOC=0%	Flash	Off	Off	Off	Off
SOC≤25%	Flash	Flash	Off	Off	Off
SOC≤50%	Flash	Flash	Flash	Off	Off
SOC≤75%	Flash	Flash	Flash	Flash	Off
SOC≤100%	Flash	Flash	Flash	Flash	Flash

Note: The light for both the status light and SOC power indicators is green.

Indicators information while discharging

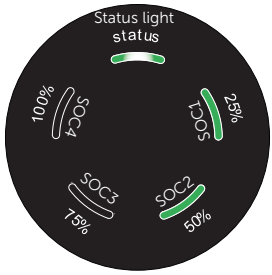

Figure 2-12 Indicator information while discharging

If the battery level is between 25% and 50%, the SOC power indicators will show as follows:

- The first two SOC power indicators (SOC1 and SOC2) will remain on solid green light;
- The SOC3 and SOC4 will be off.

Table 2-9 Indicator information while discharging

SOC value	Status light	SOC1	SOC2	SOC3	SOC4
SOC=0%	Flash	Off	Off	Off	Off
SOC≤25%	Flash	Solid	Off	Off	Off
SOC≤50%	Flash	Solid	Solid	Off	Off
SOC≤75%	Flash	Solid	Solid	Solid	Off
SOC≤100%	Flash	Solid	Solid	Solid	Solid

Note: The light for both the status light and SOC power indicators is green.

2.3.2 Battery Pack Indicator

The battery pack is equipped with a tri-colour status light (yellow/green/red) to show its operating status.

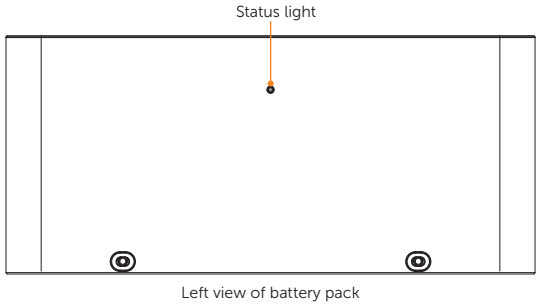

Figure 2-13 Status light

Table 2-10 Information about status light

Indication	LED	State
In normal operation		Normal flash
CAN communication loss for 300 seconds		Fast flash
CAN communication loss for 30 seconds		Solid
AFE communication loss		Normal flash
Battery cell sampling fault		Normal flash

Note: Fast flash indicates that the light flashes every 0.1 seconds, and the normal flash indicates that the light flashes every 5 seconds.

2.4 Black Start

The device can provide Black Start capacity, meaning that our energy storage inverter and battery can continue to run even if the power grid and photovoltaic panel are out of service. There are two circumstances:

The startup procedure for Black Start is as follows:

- If there is only one BMS, the startup procedure for Black Start is shown as follows:
  - » Pressing and holding the "POWER" button for over 15 seconds, the status light will fast flash yellow light every 0.1 seconds. After about one minute, the yellow light turns to a green light, which flashes every 5 seconds. At this point, the system enters "Discharge" status.
- If the system is in parallel, the startup procedure for Black Start is shown as follows:
  - » Pressing and holding the "POWER" button of the master BMS for over 15 seconds, the status light of the master BMS will fast flash yellow light every 0.1 seconds, as well as the status light of the secondary BMS. After a while, the yellow light turns to a green light, which flashes every 5 seconds. At this point, the system enters "Discharge" status.

NOTICE!

- Please release the button when the status light flashes yellow fastly.
- The status light of the secondary BMS flashes after a short delay when the status light of the master BMS flashes.

2.5 DIP Switch

A DIP Switch is actually a set of small manual electronic switches that are designed to be packaged with other circuits. It is currently equipped with the battery pack.

The location of the DIP switch and the factory defaults are shown as below.

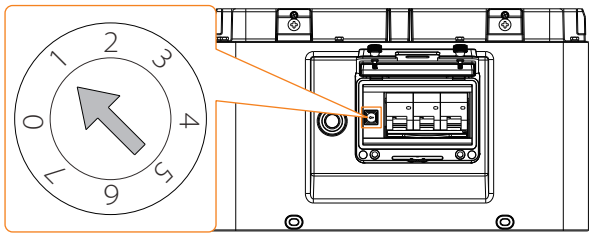

Right view of BMS

Figure 2-14 DIP switch

There are two circumstances, with details below:

- If there is only one BMS, turn the DIP switch to the "1" position.

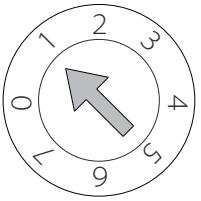

Figure 2-15 DIP switch: "1" position

- If the system is in parallel, turn the DIP switch of the last BMS to the "1" position, and the DIP switch of the remaining BMS shall stay in "0" position.

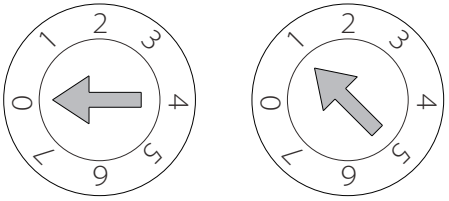

DIP switch of remaining BMSs DIP switch of the last BMS

Figure 2-16 DIP switch: "0" and "1" position

Table 2-11 Description of DIP switch

No.	Description
0	Initial state
1	Terminal resistance
2~7	A reserved function

NOTICE!

- To adjust the DIP switch, a small flat-head screwdriver should be prepared by the users themselves. **Do not use a pencil**. Graphite from the pencil is conductive and may damage the DIP switch.

2.6 Label

Some kinds of labels, such as a performance label, a manufacturer label, etc., should be pasted on the battery pack and BMS. The above-mentioned labels are located on the left side of the battery pack, as well as on the top right corner of the BMS. For example, the system performance label of the BMS consists of the following parts:

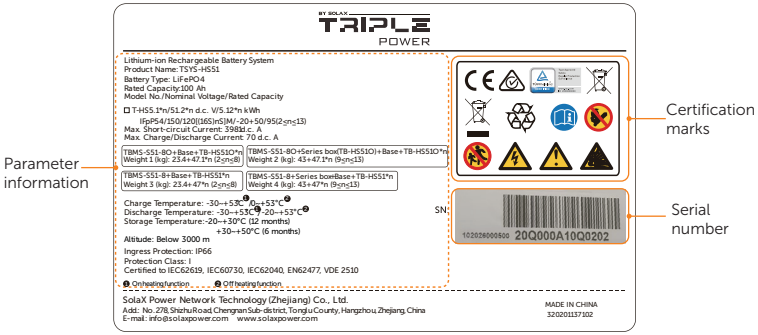

Figure 2-17 System performance label

Notice!

- Regarding the SN, 32-base nomenclature is adopted to identify the type, specific features, manufacture date, order serial number, and factory serial number.

32-base Nomenclature

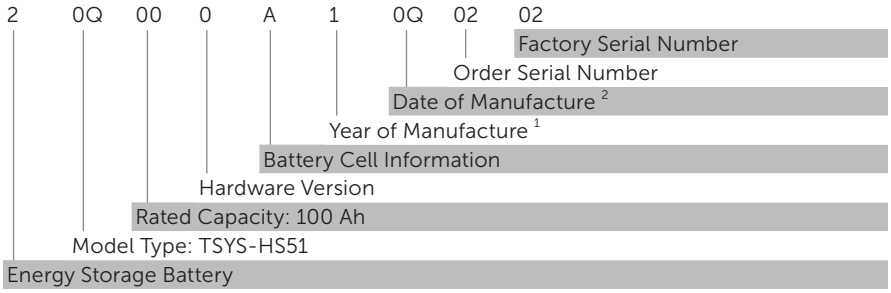

Figure 2-18 Explanation of SN

1 0-2023, 1-2024, 2-2025 ..... A-2033, B-2034 .....
2 The two digits represent the week of when the battery pack was produced. There are totalling 52 weeks in a year, and the first week is represented by the number 00, and the second week is represented by the number 01. Do the rest in the same manner in accordance with the 32-base coding rule.

2.7 Explanation of Symbols and Icons

The meaning of the symbols and icons on the labels is shown as follows:

Table 2-12 Explanation of symbols and icons

Symbol and Icon	Description
	CE mark of conformity.
	TUV certification.
	RCM mark of conformity
	Protective grounding point.
	The battery module may explode. The rechargeable battery can become hot during operation. Avoid touch during operation.
	Danger, electric shock. Do not touch the device after it is powered on. Otherwise, an electric shock may occur.
	Danger. Due to possible risks, do not touch the device after it is powered on.
	Observe enclosed documentation.
	The device cannot be disposed together with the household waste.
	The device cannot be disposed together with the household waste.
	The battery system must be disposed of at a proper facility for environmentally-safe recycling.

Symbol and Icon	Description
	Keep the device away from children.
	Keep the device from open flames or ignition sources.

3 Transportation and Storage

3.1 Transportation Requirements

DANGER!

- Do not disassemble the battery violently. Otherwise, it may lead to battery pack short circuit, damage to the device (leakage, rupture), fire, or explosion.

CAUTION!

- Hold the handles on the device or put your hands underneath the device to move or lift, and do not hold the handles on the parts installed in it.
- Srtictly follow the document to carry or move the battery pack. Ensure that the device is correctly placed. Do not place a battery upside down or vertically, lay it on one side, or tilt it. And keep away from rain and water.

NOTICE!

General requirement

- Please pay attention to the signs on the package.
- To prevent injury from oversize loads, assess the device you're about to lift before you start lifting.
- If more than 2 people lift a device, reasonably arrange to have a balanced weight distribution.
- Wear personal protective device, such as, safety gloves, safety boots, etc., to prevent injuries when lifting devices with bare hands.
- Know the right body posture to prevent personal injuries when lifting devices, for instance, bend at your knees, not at your waist or back, and do not twist your back.
- To prevent injuries, do not quickly lift the heavy device above the waist.
- To prevent scratches and dents, or damage to components and cables, avoid impact and falling when moving.
- Be aware of workbenches, slopes, steps, and other places where it is easy to slip when moving devices. Ensure that the passageways are smooth, clean, and away from obstacles.
- To prevent tipover, the forklift's forks must be placed under the load. Center the weight of the load between the forks, and adjust the forks to distribute the weight evenly. Firmly attach the loads to the forks before lifting, and arrange for people to watch for when lifting.
- Relevant qualifications for transport of dangerous goods must be obtained by the forwarding agent engaged in such businesses. Do not transport it in an open trailer.

NOTICE!

- Strictly abide by the international regulations on the transport of dangerous goods, and meet the supervision requirements stipulated by the transport authority of the departure country, transit country, and country of destination, respectively.
- Before transportation, check that the battery package is intact and that there is no abnormal odor, leakage, smoke, or sign of burning. Otherwise, the batteries cannot be transported.
- The packing case must be secured for transportation. Handle the case with care during loading, unloading, and transportation, and take measures to prevent moisture damage to the device during transportation.
- Handle gently when moving the battery pack to prevent bumping and damage to individuals.
- Unless otherwise specified, dangerous goods shall not be mixed with goods containing food, medicine, animal feed, or their additives in the same vehicle or container.
- Before moving a faulty battery pack (with scorch, leakage, bulge, or water intrusion), insulate its positive and negative terminals, pack it, and place it in an insulated explosion-proof box as soon as possible. Record information such as the site name, address, time, and fault symptom on the box.
- Keep away from flammable material storage areas, residential areas, and other population centers (e.g., public transport, elevators) when transporting the faulty battery pack.

3.2 Storage Requirements

DANGER!

- Ensure that batteries are stored in a dry, clean, and ventilated indoor environment that is free from sources of strong infrared or other radiations, organic solvents, corrosive gases, and conductive metal dust. Do not expose batteries to direct sunlight or rain and keep them far away from sources of heat and ignition.
- If a battery is faulty (with scorch, leakage, bulge, or water intrusion), move it to a dangerous goods warehouse for separate storage. And it must be scrapped as soon as possible.
- Store the device according to the caution signs on the packaging to prevent device damage. Do not place a battery upside down or vertically, lay it on one side, or tilt it.
- Store the battery packs in a separate place. Do not store them together with other devices. Do not stack too high. The storage site should be equipped with qualified fire fighting facilities, such as fire sand and fire extinguishers.

CAUTION!

- If a battery pack is stored for a long time, please periodically recharge it to protect from damage.

Notice!

General requirement

- Store the device according to the signs on the packaging.
- Do not remove the original packaging material and check the outer packaging material regularly.
- If the rechargeable battery has been stored for more than 1 year, it must be checked and tested by professionals before use.
- The relative humidity should be between 4% and 100%.
- It is recommended to store the battery in a temperature range of -20°C to +50°C.

Table 3-1 Storage temperature and recharge time

Storage temperature	Recharge time
+30°C to +50°C	Every 6 months.
-20°C to +30°C	Every 12 months.

4 Preparation before Installation

4.1 Selection of Installation Location

The installation location selected for the rechargeable battery is quite critical in the aspect of the guarantee of machine safety, service life and performance.

- Flaunting an IP66 enclosure, the battery can be used outdoors and indoors;
- The installation position shall be convenient for wiring connection, operation and maintenance.

4.1.1 Environment Requirement

Make sure the installation site meets the following conditions:

- Ambient temperature: -30°C~+53°C;
- Humidity: 4~100%RH
- Do not install the rechargeable battery in the areas where the altitude exceeds 3000 m;
- Install the rechargeable battery in a well-ventilated environment for heat dissipation;
- Do not install the rechargeable battery in areas with flammable, explosive and corrosive materials, as well as areas near combustibles and antenna.

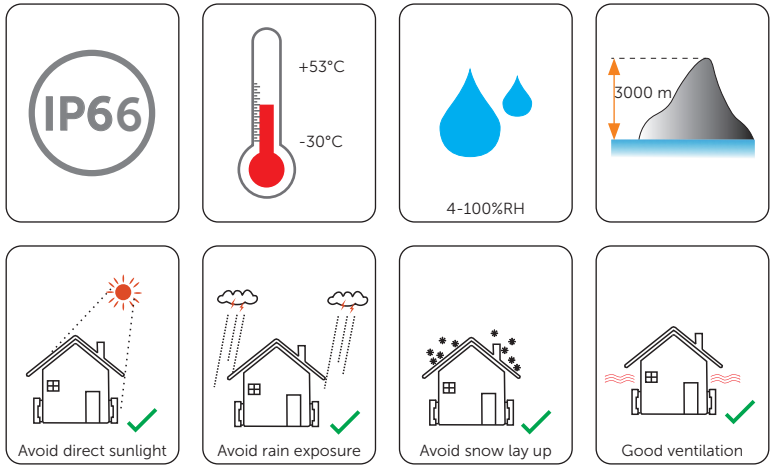

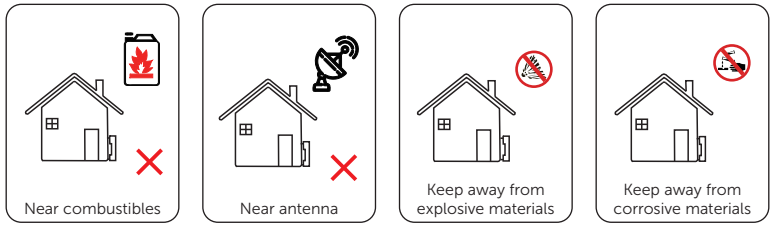

Figure 4-1 Environment requirements

4.1.2 Installation Carrier Requirement

The mounting location must be suitable for the weight and dimensions of the product and the support surface for installation must be made of a non-flammable material. Detailed requirements are shown below:

- The installation floor and wall shall be made of noncombustible materials, such as solid brick, concrete, and the surface shall be level, firm, and flat with a sufficient load-bearing capacity;
- Please ensure that the installation site has a bearing capacity of at least 4 times the weight of the entire battery system. For instance, if the user purchases one BMS, three battery packs and one base, the load-bearing capacity ≥ (BMS weight + 3*battery pack weight + base weight) * 4;
- Please ensure that the thickness of any part of the wall is no less than 150 mm;
- The product must not be installed on the wood wall.

4.1.3 Clearance Requirement

To guarantee proper heat dissipation and ease of disassembly, the minimum space around the rechargeable battery must meet the standards indicated below.

- The clearance between the battery to the inverter shall be no less than 100 mm;
- The length of both positive and negative power cables (connecting from the battery to the inverter) provided by our company is 2000 mm;
- Please reserve a distance between 400 to 800 mm son both sides of the device;
- Please reserve enough distance from the device to the ceiling for capacity expansion.

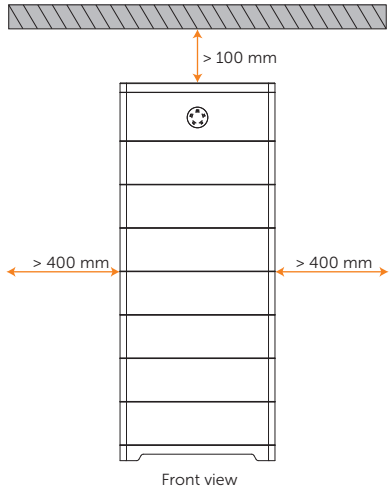

Figure 4-2 Installation clearance for one tower

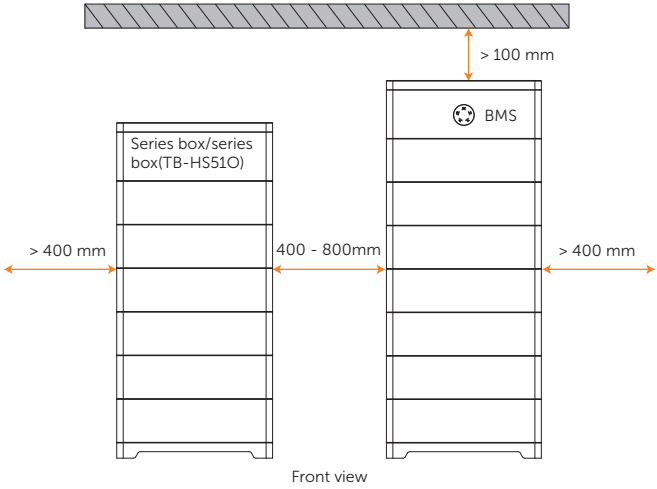

Figure 4-3 Installation clearance for two towers

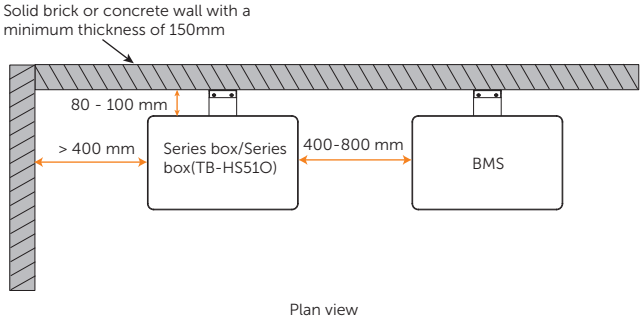

Figure 4-4 Installation clearance for two towers

4.2 Installation Option

There are two options: one tower, and two towers.

- If the number of battery packs is ≤ 8, the installation option for one tower is recommended.

Table 4-1 Information about one tower (TB-HS51)

Number of battery packs / One tower	2	3	4	5	6	7	8
Height (mm)	621	789	957	1,125	1,293	1,461	1,629
Weight (kg)	117.4	164.4	211.4	258.4	305.4	352.4	399.4

Table 4-2 Information about one tower (TB-HS51O)

Number of battery packs / One tower	2	3	4	5	6	7	8
Height (mm)	621	789	957	1,125	1,293	1,461	1,629
Weight (kg)	117.6	164.7	211.8	258.9	306.0	353.1	400.2

- If the number of battery packs is ≥ 9, the installation option for two towers is recommended.

Table 4-3 Information about two towers (TB-HS51)

		Number of battery packs	Height (mm)	Weight (kg)
A	The tower with TBMS-S51-8	5	1,125	258.4
	The tower with series box	4	957	207.6
B	The tower with TBMS-S51-8	5	1,125	258.4
	The tower with series box	5	1,125	254.6
C	The tower with TBMS-S51-8	6	1,293	305.4
	The tower with series box	5	1,125	254.6
D	The tower with TBMS-S51-8	7	1,461	352.4
	The tower with series box	5	1,125	254.6
E	The tower with TBMS-S51-8	6	1,293	305.4
	The tower with series box	6	1,293	301.6
F	The tower with TBMS-S51-8	7	1,461	352.4
	The tower with series box	6	1,293	301.6

Table 4-4 Information about two towers (TB-HS51O)

		Number of battery packs	Height (mm)	Weight (kg)
A	The tower with TBMS-S51-8O	5	1,125	258.9
	The tower with series box(TB-HS51O)	4	957	208.0
B	The tower with TBMS-S51-8O	5	1,125	258.9
	The tower with series box(TB-HS51O)	5	1,125	255.1
C	The tower with TBMS-S51-8O	6	1,293	306.0
	The tower with series box(TB-HS51O)	5	1,125	255.1
D	The tower with TBMS-S51-8O	7	1,461	353.1
	The tower with series box(TB-HS51O)	5	1,125	255.1
E	The tower with TBMS-S51-8O	6	1,293	306.0
	The tower with series box(TB-HS51O)	6	1,293	302.2
F	The tower with TBMS-S51-8O	7	1,461	353.1
	The tower with series box(TB-HS51O)	6	1,293	302.2

4.3 Tools Requirement

Installation tools include but are not limited to the following recommended ones. If necessary, use other auxiliary tools on site.

Personal Protective Device


Insulating gloves


Safety boots


Safety goggles

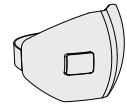
Anti-dust mask

Installation Tools


Hammer drill
(Ø10mm)

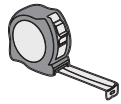
Measuring tape


Utility knife


Marker

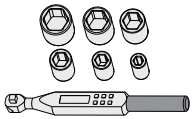
Torque wrench (M4\M5)

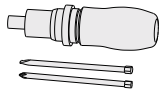
Torque screwdriver
(Phillips head: M4\M5)

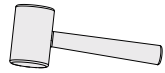
Rubber mallet

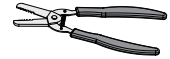
Wire stripper


Crimping tool for RJ45

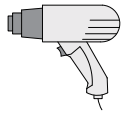
Heat gun

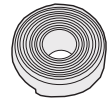
Heat shrink tubing
(Ø8mm)


Spirit level


Vacuum cleaner


Ladder

4.4 Additionally Required Materials

Table 4-5 Additionally required wires

No.	Required Material		Type	Conductor Cross-section
1	Additional PE wire		Conventional yellow and green wire	6 mm^2 (for rated current of 30 A); or 10 mm^2 (for rated current of 60 A)

5 Unpacking and Inspection

5.1 Unpacking

- The rechargeable battery undergoes 100% testing and inspection before shipping from the manufacturing facility. However, transport damage may still occur. Before unpacking the rechargeable battery, please verify that the model and outer packing materials for damage, such as holes and cracks.
- Unpack a battery pack according to the following figure. If there are other cartons, such as the BMS carton and series box/series box(TB-HS51O) carton, the unpacking procedure can also be referred to the following figure.

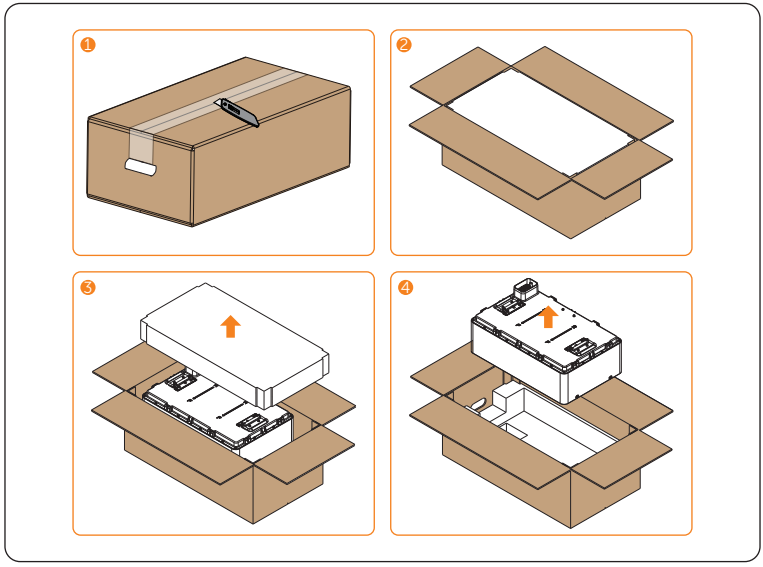

Figure 5-1 Unpacking the battery pack

- Be careful when dealing with all package materials which may be reused for storage and relocation of the rechargeable battery in the future.
- Upon opening the package, check whether the appearance of the rechargeable battery is damaged or lack of accessories. If any damage is found or any parts are missing, contact your dealer immediately.

5.2 Scope of Delivery

Different types of packing lists for the different installation options, see the following table for details.

Table 5-1 Types of packing lists

Option	Packing List			
	BMS (TBMS-S51-8/ TBMS-S51-8O)	Battery pack	Series box/ Series box(TB-HS51O)	BMS Cable (Optional)
One tower	√	√	×	O
Two towers	√	√	√	O

Note: The mark "O" indicates that it is an optional packing list and can be purchased based on the user's actual situation.

BMS

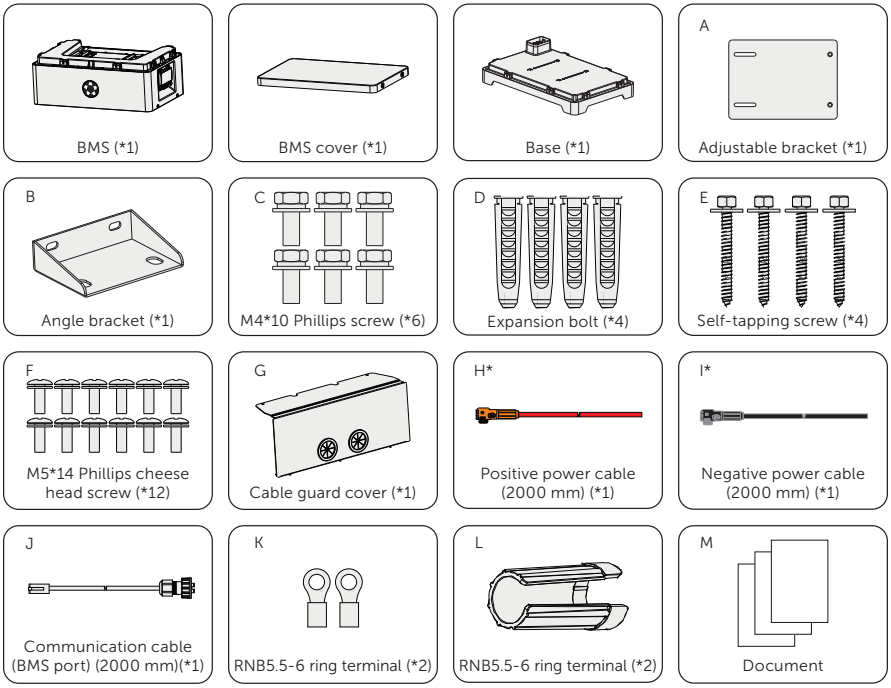

NOTICE!

- The RNB5.5-6 ring terminal is suitable for 6 mm^2 grounding wire.

One Battery Pack

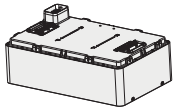
Battery pack (*1)

A1

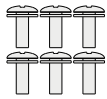
M5*14 Phillips cheese head screw (*6)

B1

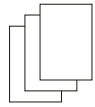
Document

Series Box/Series box(TB-HS51O)

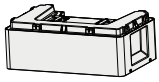
Series box/Series box(TB-HS51O) (*1)


Series box/Series box(TB-HS51O) cover (*1)

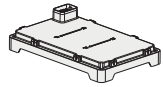
Base (*1)

A2


Adjustable bracket (*1)

B2

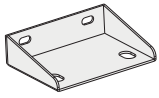
Angle bracket (*1)

C2

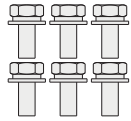
M4*10 Phillips screw (*6)

D2

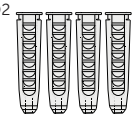
Expansion bolt (*4)

E2

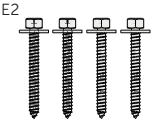
Self-tapping screw (*4)

F2

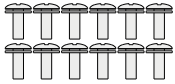
M5*14 Phillips cheese head screw (*12)

G2

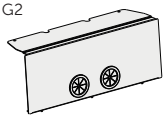
Cable guard cover (*1)

H2*


Positive power cable (2000 mm) (*1)

I2*


Negative power cable (2000 mm) (*1)

J2


Communication cable (COM B port) (2200 mm) (*1)

K2


Heater cable (HEAT port) (2200 mm) (*1)

L2


Grounding cable (2200 mm) (*1)

M2

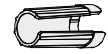
Rotation wrench (*1)

N2

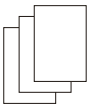

Document

NOTICE!

- If the number of battery packs is ≥ 9, the installation option for two towers is recommended. Therefore, a series box/series box(TB-HS51O) needs to be installed to achieve two towers in series.
- The above accessory kit can be purchased according to the actual situation.

BMS Cable (Optional)

A3

Positive power y cable (2000 mm) (*1)

B3

Negative power y cable (2000 mm) (*1)

C3

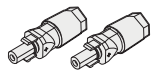

Male Phoenix terminal (*2)

D3

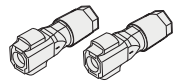

Female Phoenix terminal (*2)

E3



RNB14-5 ring terminal (*2)

NOTICE!

- As for the installation steps for power y cables, please refer to the inverter's *User Manual*.
- Users can purchase the above-mentioned accessory kit based on their actual needs.
- Do not use the above-mentioned power y cables if the device is in parallel.
- The RNB14-5 ring terminal is suitable for 10 mm^2 grounding wire.

6 Installation and Wiring about One Tower

6.1 Installation Procedure about One Tower

WARNING!

- Only the qualified personnel can perform the mechanical installation following the local standards and requirements.
- Check the existing power cables or other piping in the wall to prevent electric shock or other damage.
- Use insulated tools and wear personal protective device (PPE) during installation and maintenance.

CAUTION!

- Pay attention to the weight of the device at all times during transportation and installation, as improper lifting or dropping of the device may cause personal injury. Due to the battery pack's weight, it is suggested to arrange for 2 people to move or lift it.

NOTICE!

- Regarding the installation option for one tower, up to 8 battery packs can be installed.
- If the number of battery packs is $>$ 6, and they are installed in one tower, it is suggested to use a ladder or other similar tools when moving and lifting the battery packs.
- Please ensure that the occupied floor area's bearing capacity for the device is over four times the total weight.
- Please ensure that the thickness of any part of the wall is less than 150 mm;
- The product must not be installed on the wood wall.
- Take 8 battery packs, for instance.

The installation diagram about one tower with an inverter, see the following figure:

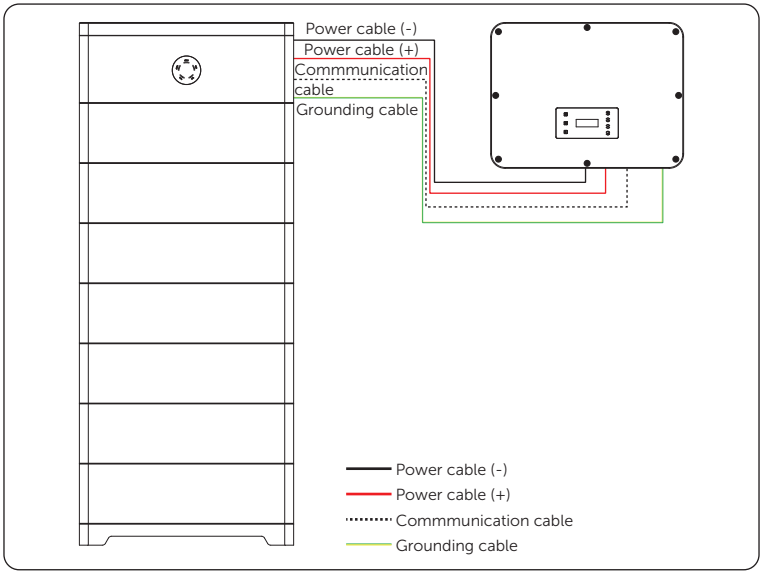

Figure 6-1 Installation diagram for one tower

Step 1: Remove dust covers from the Base, battery pack and BMS before installation.

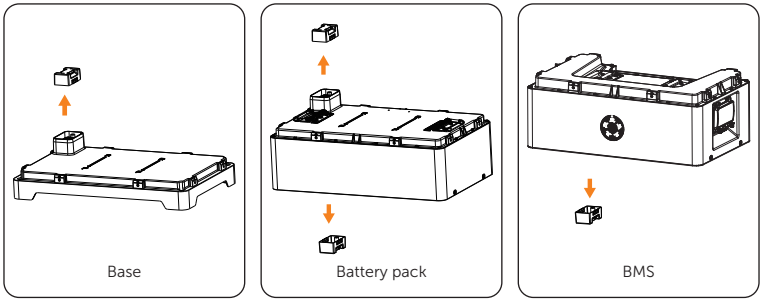

Figure 6-2 Removing dust cover

CAUTION!

- The dust cover can only be removed during installation and must be reattached after removing the battery.
- Do not touch the terminals during installation or removal of the battery.

Step 2: Place the base. The side with "R" shall be against the wall.

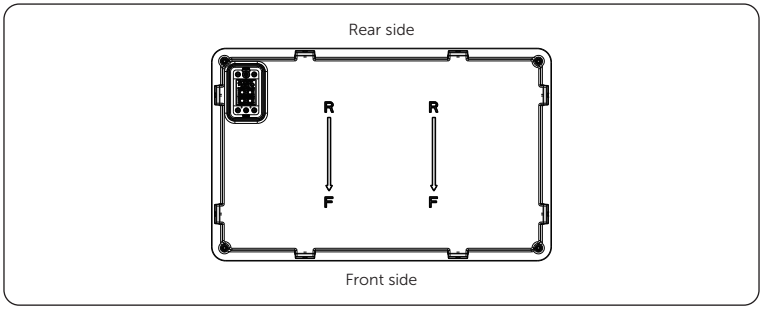

Figure 6-3 Placing base

Step 3: Check whether the base is level. If no, rotate the adjustable screws using torque wrench. If yes, skip to step 4.
Turn clockwise to raise the base, and turn anticlockwise to lower it.

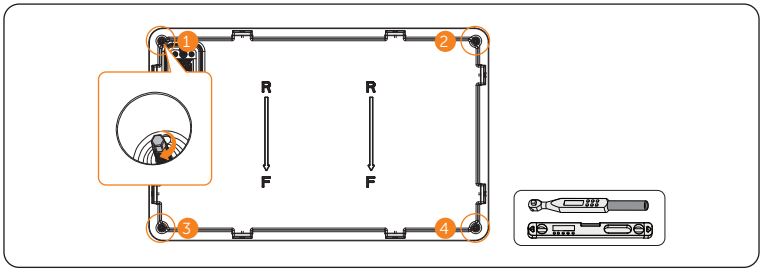

Figure 6-4 Rotating adjustable screw

NOTICE!
• Please rotate the adjustable screws to make sure that the base is level by using a spirit level and torque wrench.

Step 4: Locate the base about 80 mm to 100 mm away from the wall, and accurately mark the location of the base on both sides with a marker. The recommended distance between the product and the wall is 100 mm.

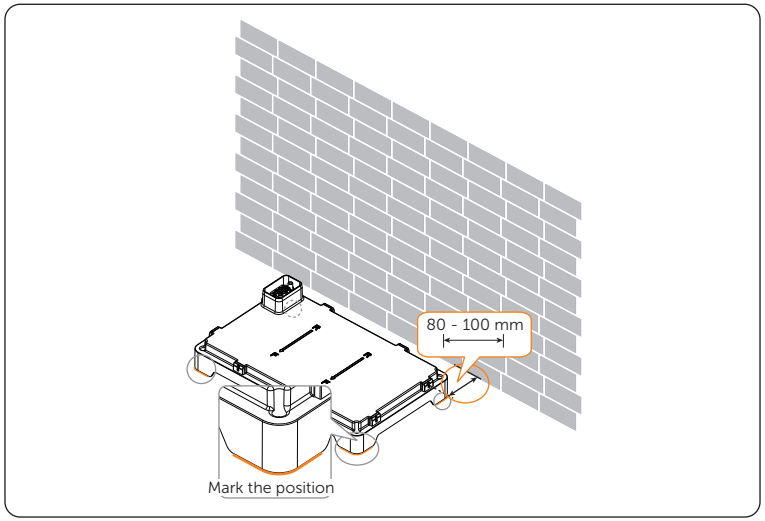

Figure 6-5 Locating base

Step 5: Place a battery pack on the base, and correctly insert and tighten the M5*14 Phillips cheese head screw (Part A1) to secure the base and battery pack. (M5: 4 pieces) (Torque for M5: 1.3-1.5 N·m)

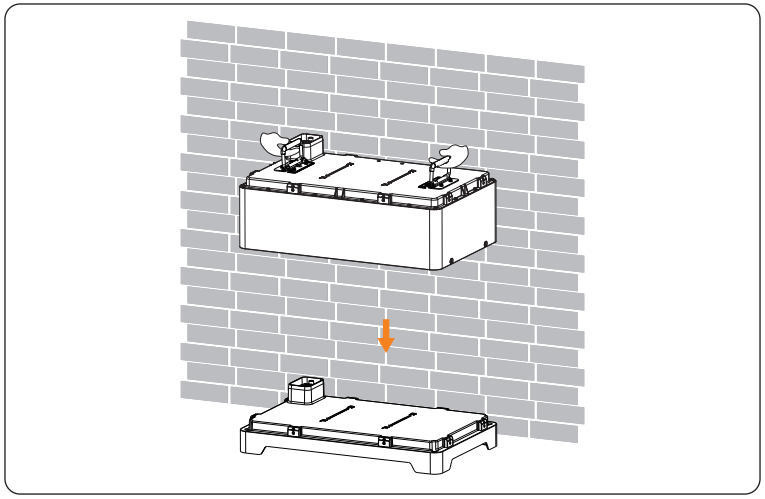

Figure 6-6 Placing battery pack

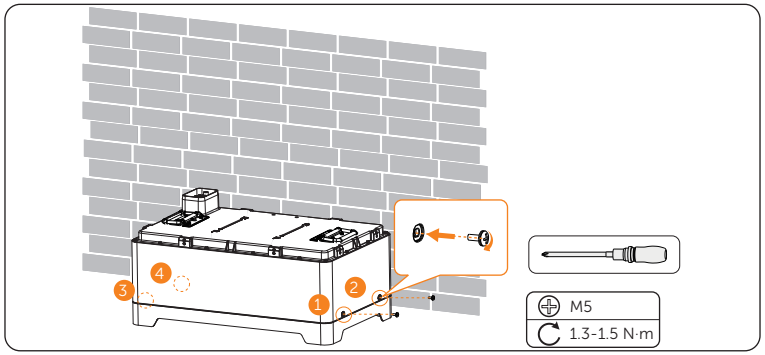

Figure 6-7 Tightening screw

NOTICE!

- Please make sure that the corners and edges of the base and battery pack are aligned before tightening screws.
- It is recommended to insert and secure the screws on one side, and then fully tighten them after the screws on the other side are fully tightened.

Step 6: Place and secure the remaining battery packs according to Step 5.

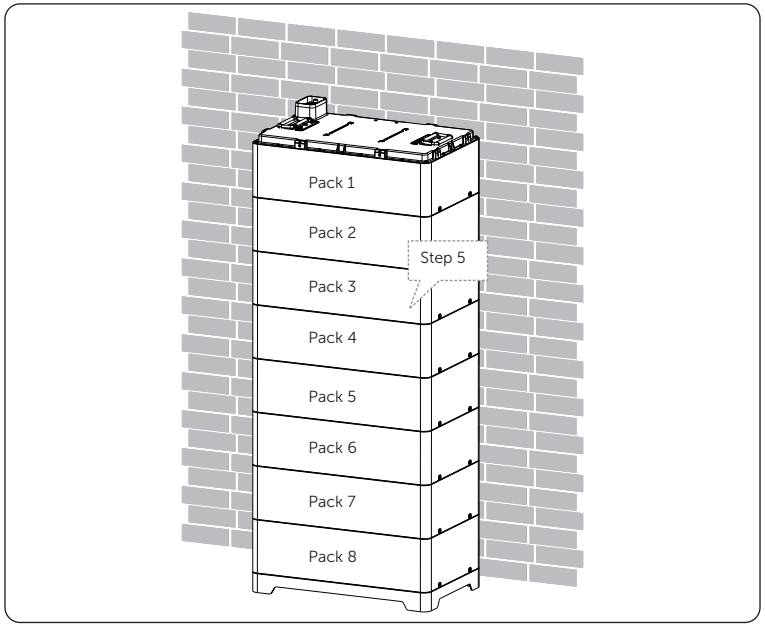

Figure 6-8 Placing battery pack

Step 7: Attach the angle bracket (Part B) and adjustable bracket (Part A) by using M5*14 Phillips cheese head screw (Part F), but do not fully tighten them. (M5: 2 pieces)

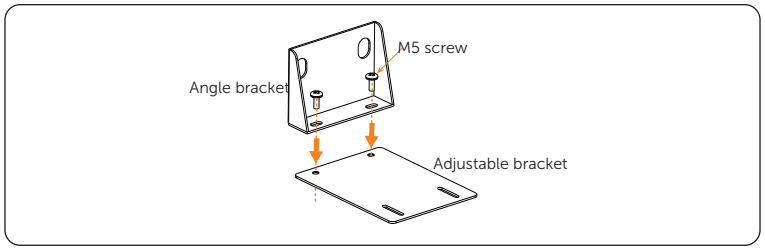

Figure 6-9 Assembling bracket

Step 8: Place and secure the assembled bracket to the battery pack by correctly inserting the M4*10 Phillips screw (Part C), and circle along the inner ring of the holes at the angle bracket side. (M4: 2 pieces)

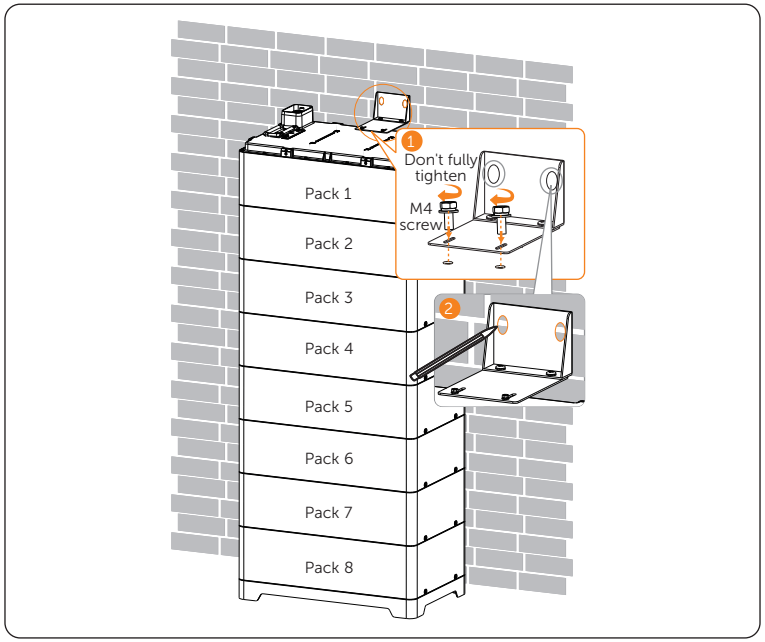

Figure 6-10 Drawing circles

NOTICE!

- Please make sure that the corners and edges of the battery packs are aligned before tightening screws.

Step 9: Remove the assembled bracket, and drill holes. (Drill bit: Ø 10mm; Drill depth: ≥ 50 mm)

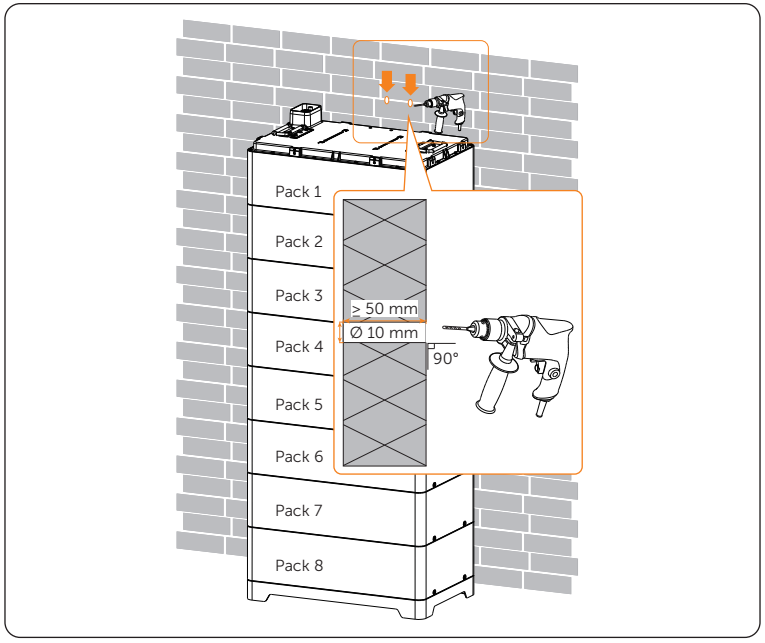

Figure 6-11 Drilling holes

NOTICE!

- An electric drill dust collector is recommended.
- To prevent dust from being released into the connector when drilling holes, users may use the package bag of the battery pack or other materials to fully cover it.

Step 10: Insert the expansion bolt (Part D) by using rubber, and ensure that the entire expansion bolt is driven into the wall. (Expansion bolt: 2 pieces)

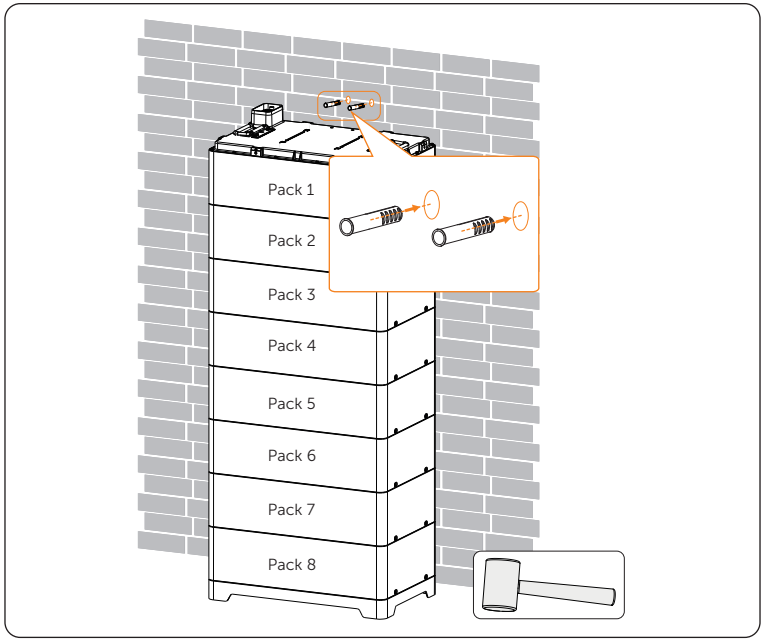

Figure 6-12 Inserting expansion bolt

Step 11: Place the assembled bracket on the battery pack again, insert the self-tapping screw (Part E) to secure it on the wall but not tighten it, and tighten M5 screws to secure brackets, as well as M4 screws on the battery pack. Finally, tighten the self-tapping screws. (Torque for self-tapping screw: 6-8 N·m; torque for M5: 1.3-1.5 N·m; torque for M4: 0.9-1.1 N·m)

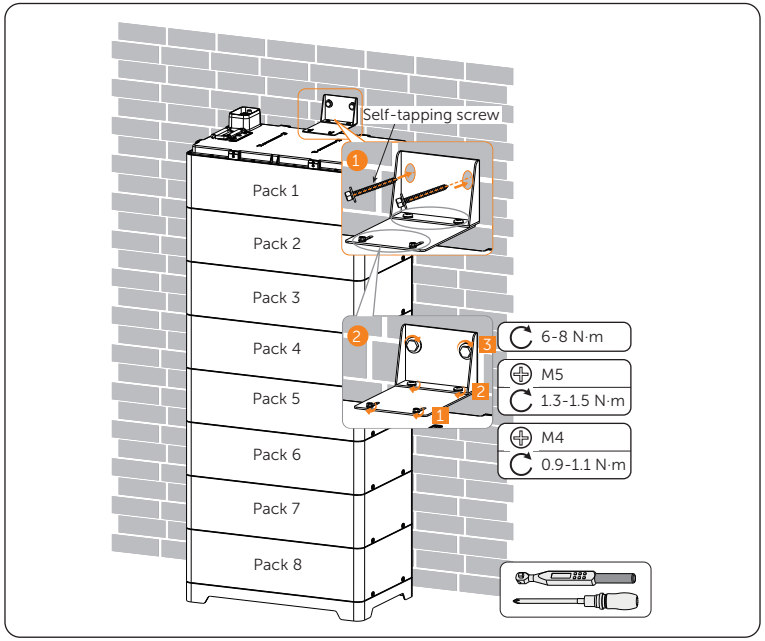

Figure 6-13 Securing assembled bracket

Step 12: Place the BMS, and correctly insert and tighten the M5*14 Phillips cheese head screw (Part F) to secure the base and battery pack. (M5: 4 pieces) (Torque for M5: 1.3-1.5 N·m)

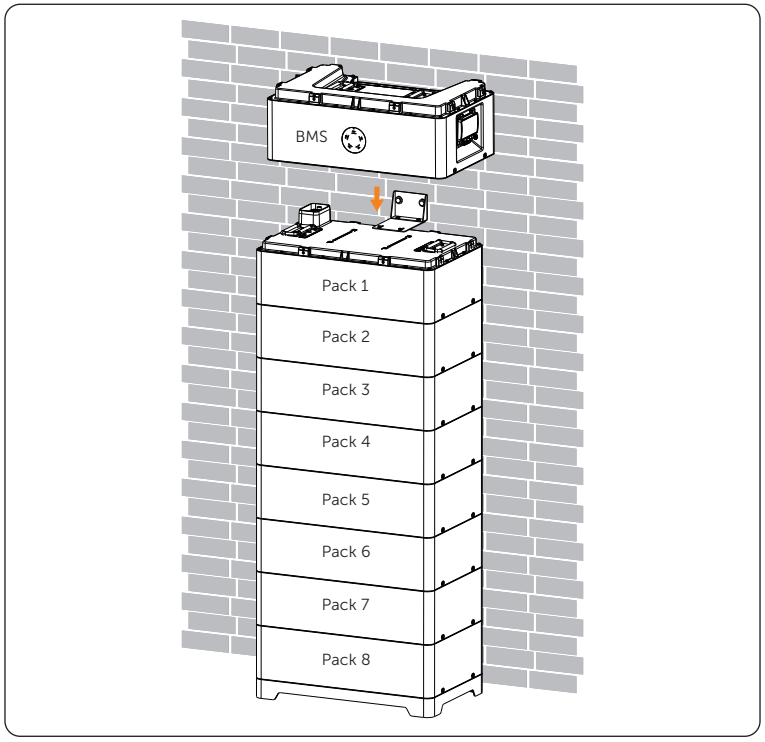

Figure 6-14 Placing BMS

NOTICE!
• Gently press the BMS before tightening screws to make sure that the connectors are tightly connected.

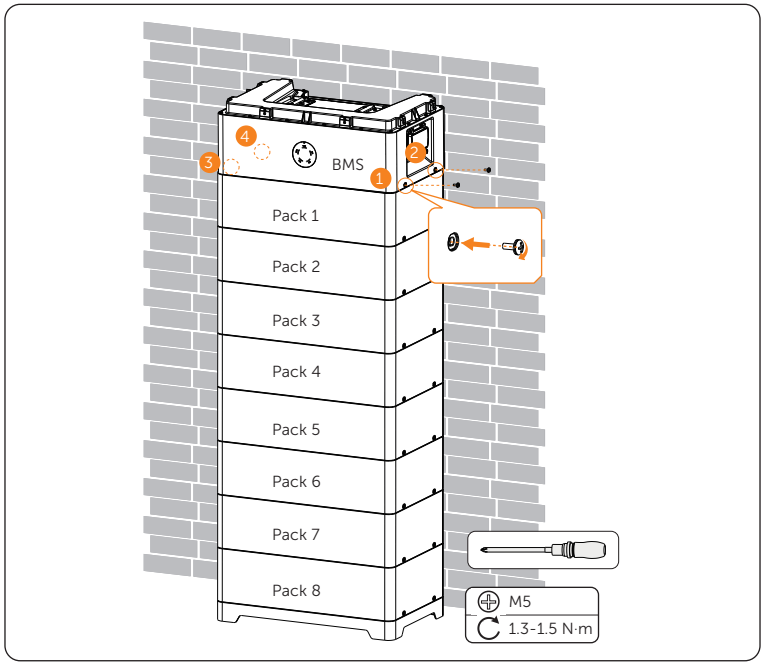

Figure 6-15 Tightening M5 screw

NOTICE!

- Please make sure that the corners and edges between the battery pack and BMS are aligned before tightening screws.
- Only one assembled bracket shall be installed for one tower.
- Both the cable guard cover and BMS cover should be installed during wiring.
- It is recommended to insert and secure the screws on one side, and then fully tighten them after the screws on the other side are fully tightened.

6.2 Electrical Wiring

CAUTION!

- It's important to give the cables a health check before connection.

Cables between the BMS and inverter, as shown in the following figure.

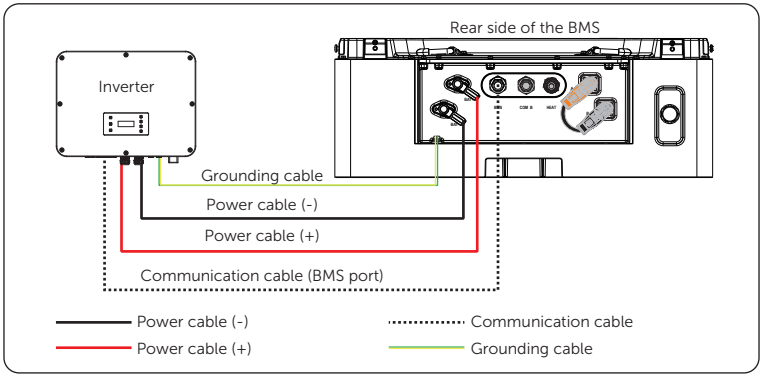

Figure 6-16 Wiring diagram

Regarding the cables shown in the Figure 6-16, see the following table.

Table 6-2 Cable information

	Cable	Length	Description
Power cable (+) (standard)		2000 mm	"BAT+" port of BMS → "BAT+" port of inverter
Power cable (-) (standard)		2000 mm	"BAT-"port of BMS → "BAT-" port of inverter
Communication cable c(standard)		2000 mm	"BMS"port of BMS → "BMS" port of inverter
Grounding cable	/	/	"⏚" port of BMS → "⏚" port of inverter. Please refer to "4.4 Additionally Required Materials" for details.
Power cable (+) (optional)		2200 mm	"BAT+" port of BMS → "BAT+" port of inverter
Power cable (-) (optional)		2200 mm	"BAT-"port of BMS → "BAT-" port of inverter

NOTICE!

- The end of cables that will be connected to inverters are bare upon delivery with the battery, and need external connector for connecting inverters.

6.2.1 PE Connection

DANGER!

- Make sure that the PE cable is securely connected.
- Failure to follow these instructions can result in death or serious injury.

NOTICE!

- In case of a rated current of 30 A, the wire size of 6 mm^2 for cables (including grounding cable) is recommended; in case of a rated current of 60 A, the wire size of 10 mm^2 for cables (grounding cable) is recommend.
- The grounding cable should be prepared by the users themselves.

A PE cable should be connected between the inverter and BMS, the steps for making PE connection are shown as follows:

Step 1: Strip the cable jacket about 8 to 10 mm from the end.

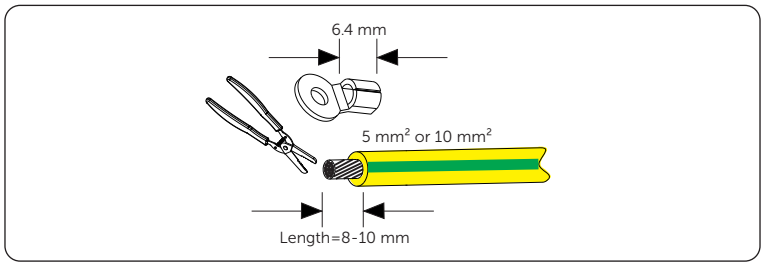

Figure 6-17 Striping cable jacket

NOTICE!

- It's necessary to use controlled motion to strip the insulation down the wire, to prevent damage to the wires.
- Make sure that the insulation layer has been stripped to a sufficient length so that the center conductor is fully exposed without any damage or nicks. In addition, make sure that no extra insulation remains beyond the connector once it's crimped on.

Step 2: Cut the heat-shrink tubing to about 28 to 30 mm length, carefully slide it onto the end of the cable, and then carefully slip the wires all the way into the ring terminal (Part K or Part E4).

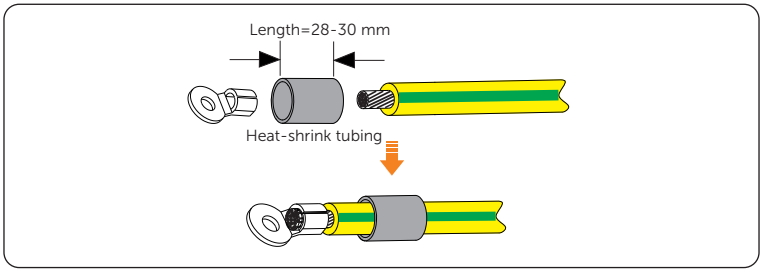

Figure 6-18 Cutting heat-shrink tubing

Step 3: Crimp the terminal, and heat the heat-shrink tubing after it wraps the end of terminal.

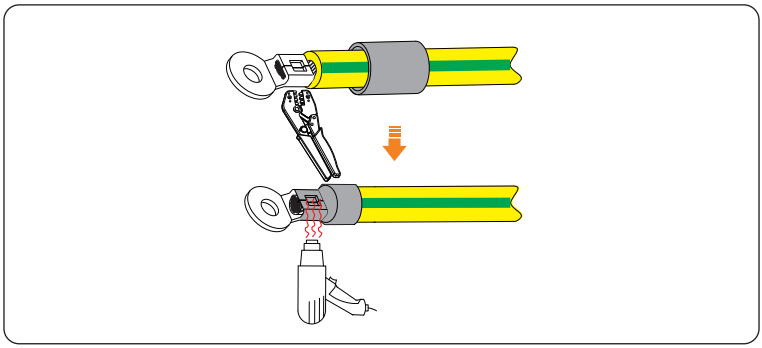

Figure 6-19 Crimping and heating

NOTICE!

- Do not place the conductor insulation into the terminal.
- Do not damage the conductor insulation while crimping.
- Move the heat gun back and forth slowly to distribute the heat evenly across the surface of heat shrink tubing.

Step 4: Unscrew the M5 screw, connect the assembled grounding cable to the grounding port of the battery pack, and then tighten M5 screw. (Torque for M5: 2.5-2.8 N·m).

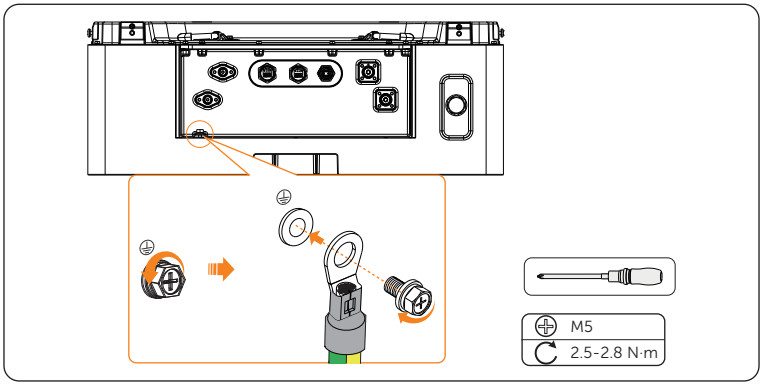

Figure 6-20 Tightening M5 screw

6.2.2 Communication Connection

Make sure that the "BMS" port on the BMS connects to the inverter is Pin to Pin. The "BMS" port pin assignment is shown as follows:

Table 6-3 "BMS" port pin assignment

PIN	1	2	3	4	5	6	7	8
BMS	/	GND	GND	CAN-H	CAN-L	/	485A	485B

The wire sequence is shown as follows:

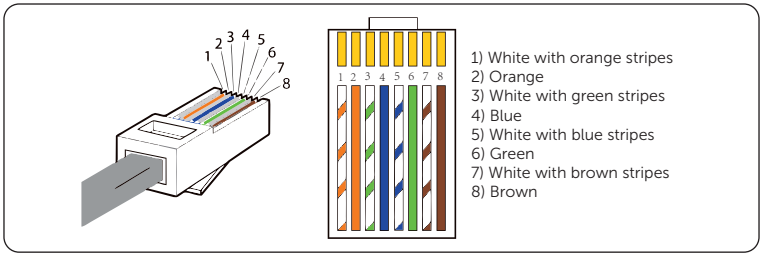

Figure 6-21 Wire sequence

Regarding the steps for making RJ45 connector to the communication cable (Part J), please do as follows:

Step 1: Rotate anti-clockwise to unscrew the waterproof cap, and strip the cable jacket about 15 mm down from the end.

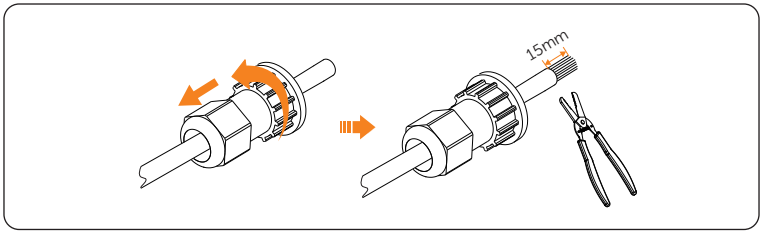

Figure 6-22 Stripping cable jacket

Step 2: Thread the cable through the waterproof cap, and carefully insert the wires all the way into the RJ45 connector, making sure that each wire passes through the appropriate guides inside the connector.

Step 3: Push the RJ45 inside the crimping tool and squeeze the crimper all the way down.

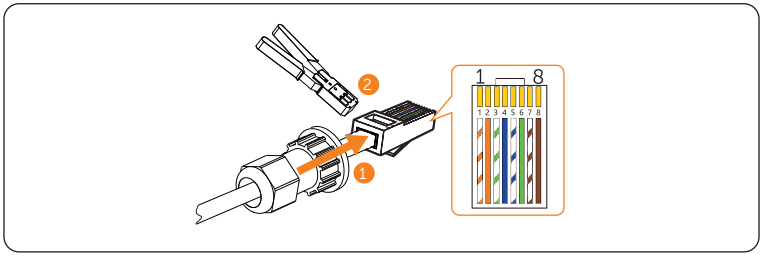

Figure 6-23 Crimping RJ45

Step 4: Rotate clockwise to tightening the waterproof cap after connecting to the inverter.

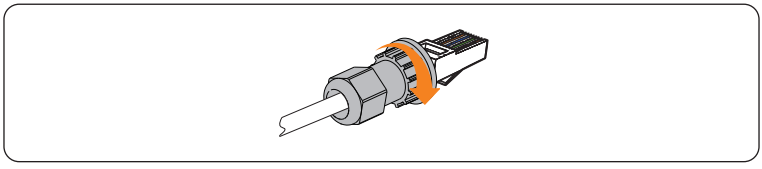

Figure 6-24 Rotating waterproof cap

NOTICE!

- The communication cable shall have a shield layer.
- The RJ45 and waterproof cap are delivered with the "Accessery Kit for Inverter". Regarding the detailed installation procedure, please refer to the inverter's *User Manual*.

6.2.3 Cable Connection between BMS and Inverter

⚠ WARNING!

- Only the qualified personnel can perform the wiring.
- Follow this manual to wire connection. The device damage caused by incorrect cabling is not in the scope of warranty.

⚠ CAUTION!

- Use insulated tools and wear individual protective tools when connecting cables.
- The short power cable, short-circuit plug, and waterproof cap will be connected before delivery. In that case, do not remove them.

NOTICE!

- Before wiring, one end of the following cables connecting to the inverter, positive and negative power cables, and communication cable, should be made with a connector.
- If the number of battery packs is ≥ 7, the wiring can be conducted first before installing the BMS.

Step 1: Take out the cable guard cover (Part G).

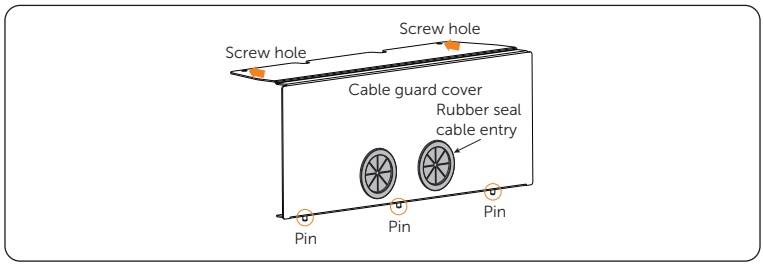

Figure 6-25 Details of cable guard cover

Step 2: Thread the cables through the rubber seal cable entry.

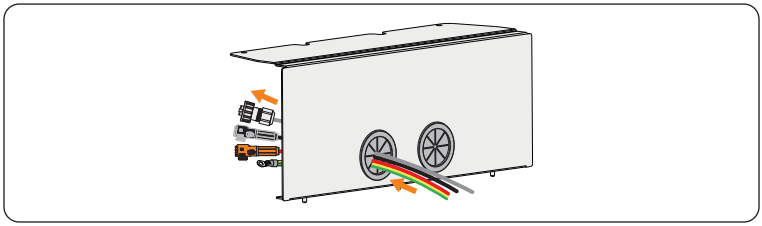

Figure 6-26 Threading cables

Step 3: Connect grounding cable to the inverter, see "6.2.1 PE Connection".

Step 4: Plug the positive power cable (Part H) to connect: "BAT+" port of the BMS and the "BAT+" port of the inverter;
Plug the negative power cable (Part I) to connect: "BAT-" port of the BMS and the "BAT-" port of the inverter.

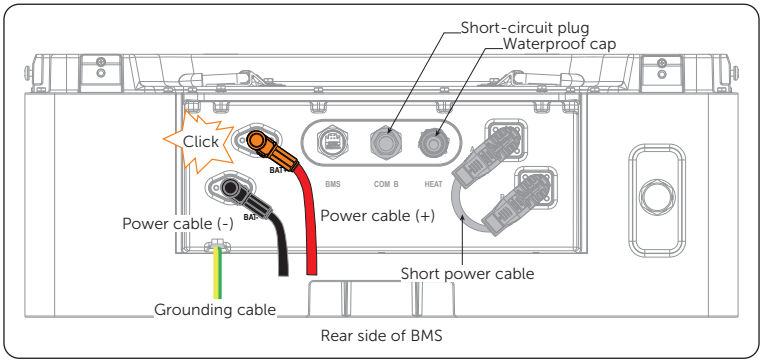

Figure 6-27 Plugging power cables

CAUTION!

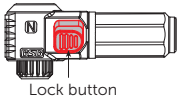

Figure 6-28 Connector on power cable

- Don't violently remove the power cables when they are locked. Otherwise, the connectors will be damaged.
- Press and hold the lock button to unplug the power cable.

Step 5: Correctly plug the communication cable (Part J) into the "BMS" port on the BMS and " BMS" port on the inverter, and tighten the cable by using rotation wrench (Part L).

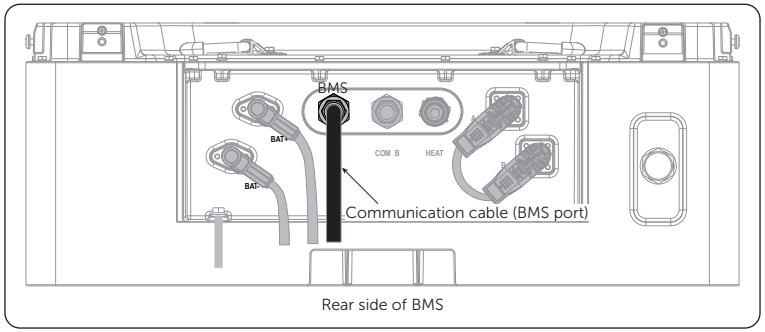

Figure 6-29 Plugging communication cable

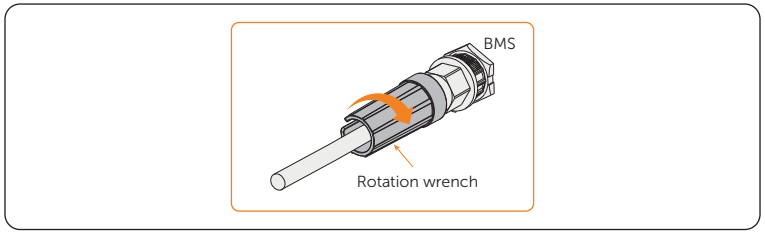

Figure 6-30 Closing communication cable

Step 6: Insert the cover into holes on the BMS.

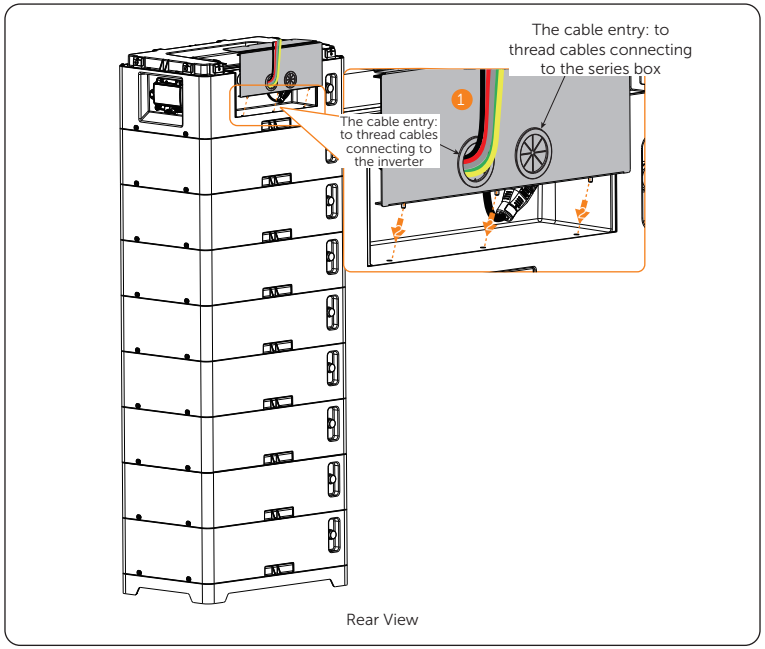

Figure 6-31 Inserting cable guard cover

Step 7: Correctly insert and tighten M4*10 Phillips screw (Part C) to secure such cover. (M4: 2 pieces) (Torque for M4: 0.9-1.1 N·m)

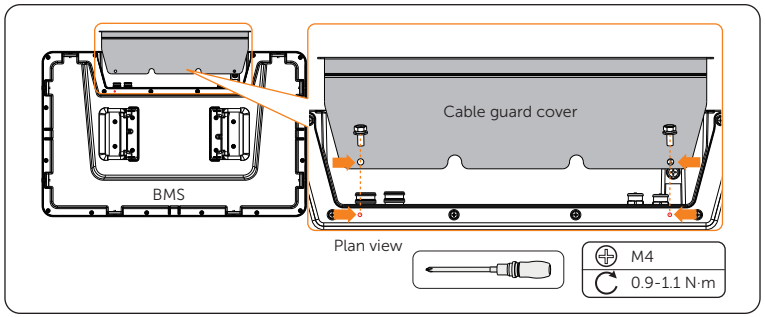

Figure 6-32 Tightening M4 screw

Step 8: Connect the cables to the inverter.

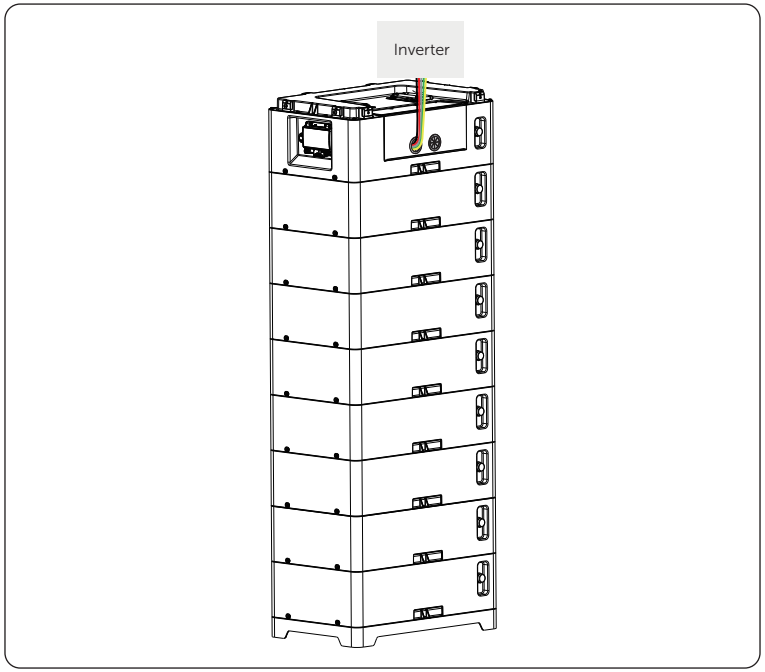

Figure 6-33 Pulling cable

Step 9: Place the BMS cover on the BMS.

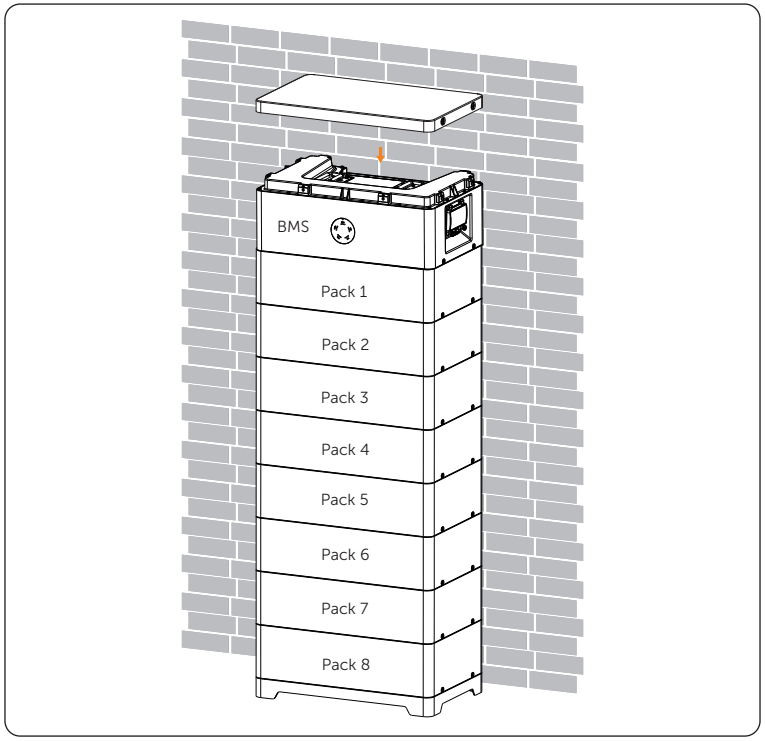

Figure 6-34 Placing BMS

Step 10: Correctly insert and tighten the M5*14 Phillips cheese head screw (Part F) to secure the base and battery pack. (M5: 4 pieces) (Torque for M5: 1.3-1.5 N·m)

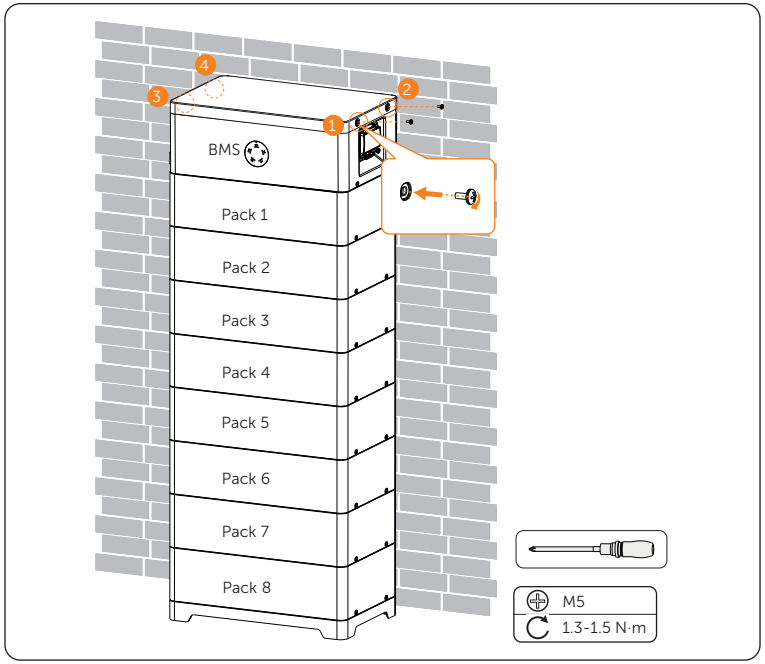

Figure 6-35 Tightening M5 screw

NOTICE!

- Please make sure that the corners and edges are aligned before tightening the screws.

7 Installation and Wiring about Two Towers

7.1 Installation Procedure about Two Towers

WARNING!

- Only the qualified personnel can perform the mechanical installation following the local standards and requirements.
- Check the existing power cables or other piping in the wall to prevent electric shock or other damage.
- Use insulated tools and wear personal protective device (PPE) during installation and maintenance.

CAUTION!

- Pay attention to the weight of the device at all times during transportation and installation, as improper lifting or dropping of the device may cause personal injury. Due to the battery pack's weight, it is suggested to arrange for 2 people to move or lift it.

NOTICE!

- If the number of battery packs in a tower is > 6, it is suggested to use a ladder or other similar tools when moving and lifting the battery packs.
- Please ensure that the occupied floor area's bearing capacity for the device is over four times the total weight.
- Please ensure that the thickness of any part of the wall is less than 150 mm;
- The product must not be installed on the wood wall.

The installation diagram about two towers with an inverter, see the following figure:

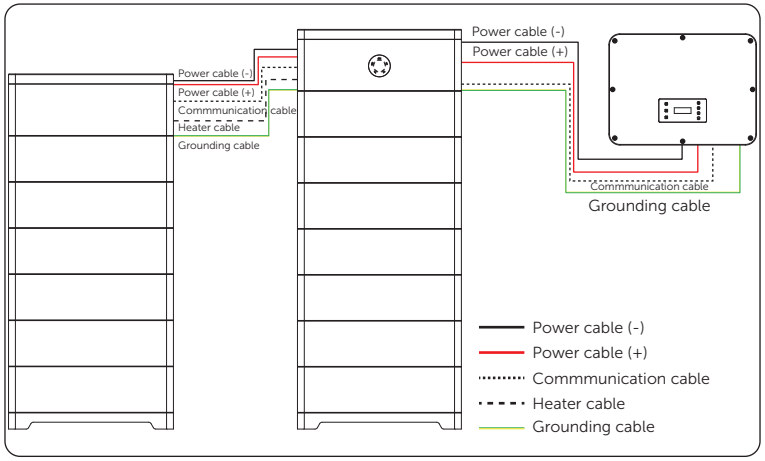

Figure 7-1 Installation diagram for two towers

Step 1: Remove dust covers from the Base, battery pack and BMS before installation.

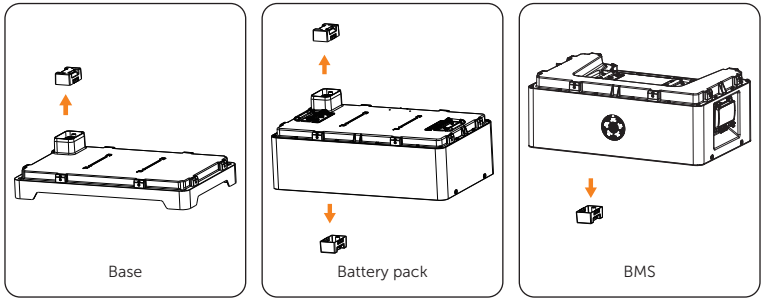

Figure 7-2 Removing dust cover

CAUTION!

- The dust cover can only be removed during installation and must be reattached after removing the battery.
- Do not touch the terminals during installation or removal of the battery.

Step 2: Place the base. The side with "R" shall be against the wall.

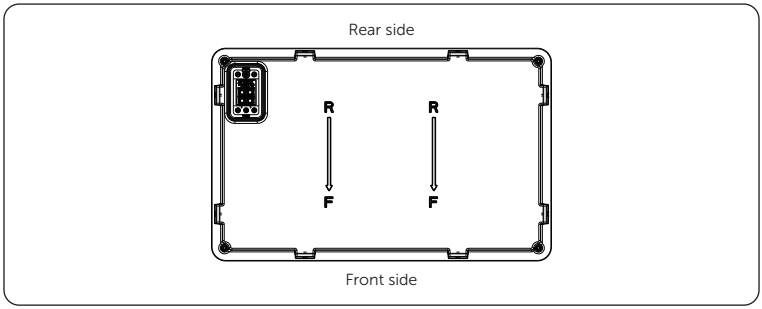

Figure 7-3 Placing base

Step 3: Check whether the base is level. If no, rotate the adjustable screws using torque wrench. If yes, skip to step 4.
Turn clockwise to raise the base, and turn anticlockwise to lower it.

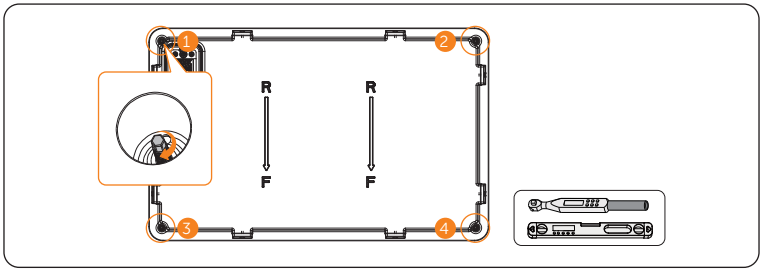

Figure 7-4 Rotating adjustable screw

NOTICE!
• Please rotate the adjustable screws to make sure that the base is level by using a spirit level and torque wrench.

Step 4: Locate the base about 80 mm to 100 mm away from the wall, and accurately mark the location of the base on both sides with a marker. The recommended distance between the product and the wall is 100 mm.

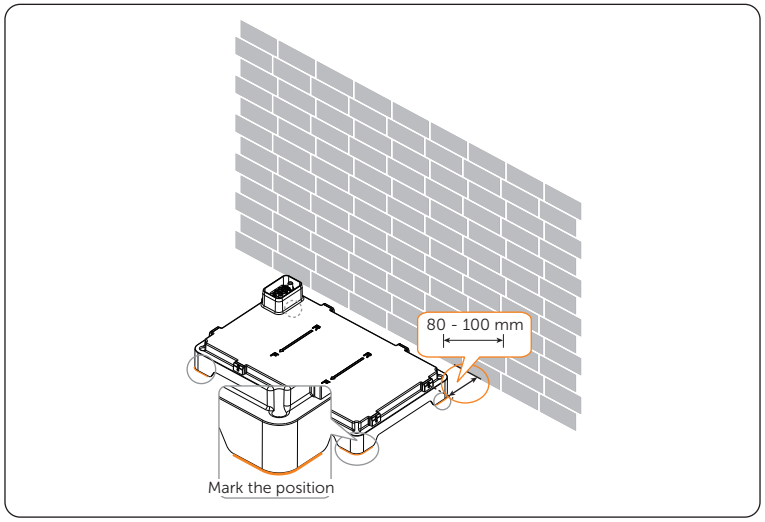

Figure 7-5 Locating base

Step 5: Place a battery pack on the base, and correctly insert and tighten the M5*14 Phillips cheese head screw (Part A1) to secure the base and battery pack. (M5: 4 pieces) (Torque for M5: 1.3-1.5 N·m)

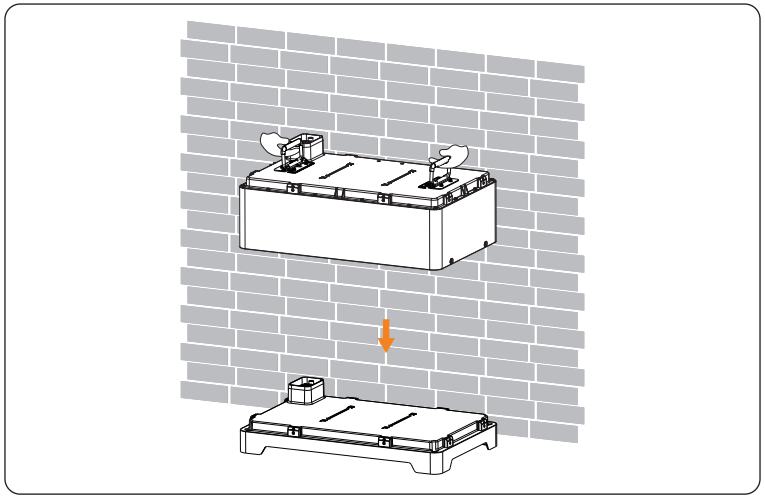

Figure 7-6 Placing battery pack

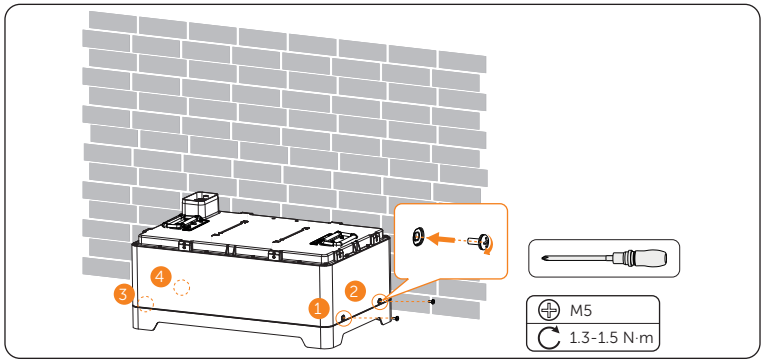

Figure 7-7 Tightening screw

NOTICE!

- Please make sure that the corners and edges of the base and battery pack are aligned before tightening screws.
- It is recommended to insert and secure the screws on one side, and then fully tighten them after the screws on the other side are fully tightened.

Step 6: Place and secure the remaining battery packs according to Step 5.

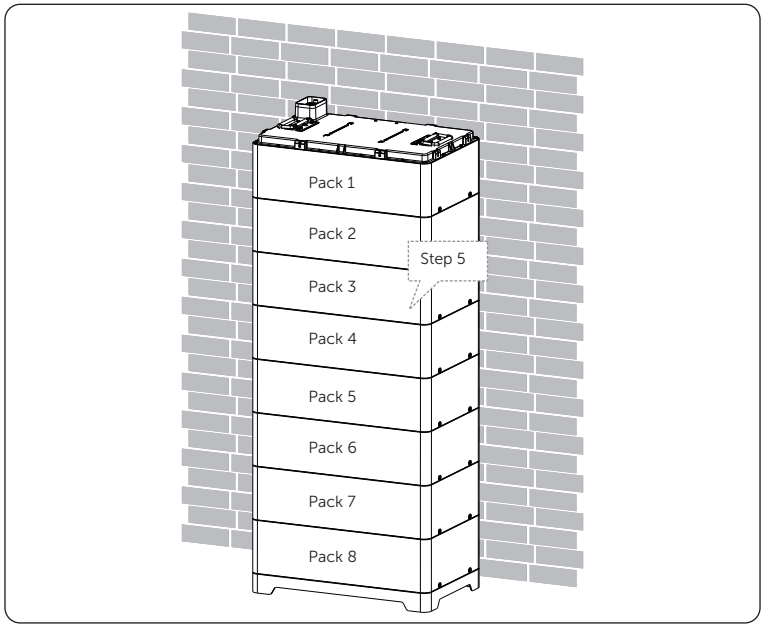

Figure 7-8 Placing battery pack

Step 7: Attach the angle bracket (Part B) and adjustable bracket (Part A) by using M5*14 Phillips cheese head screw (Part F), but do not fully tighten them. (M5: 2 pieces)

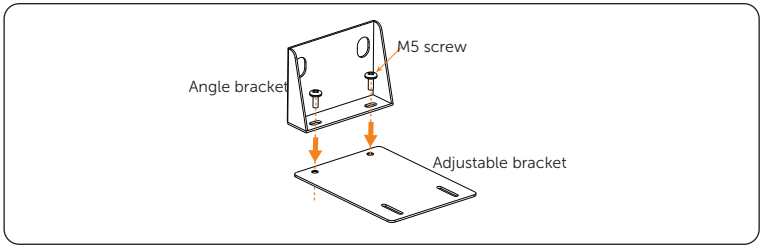

Figure 7-9 Assembling bracket

Step 8: Place and secure the assembled bracket to the battery pack by correctly inserting the M4*10 Phillips screw (Part C), and circle along the inner ring of the holes at the angle bracket side. (M4: 2 pieces)

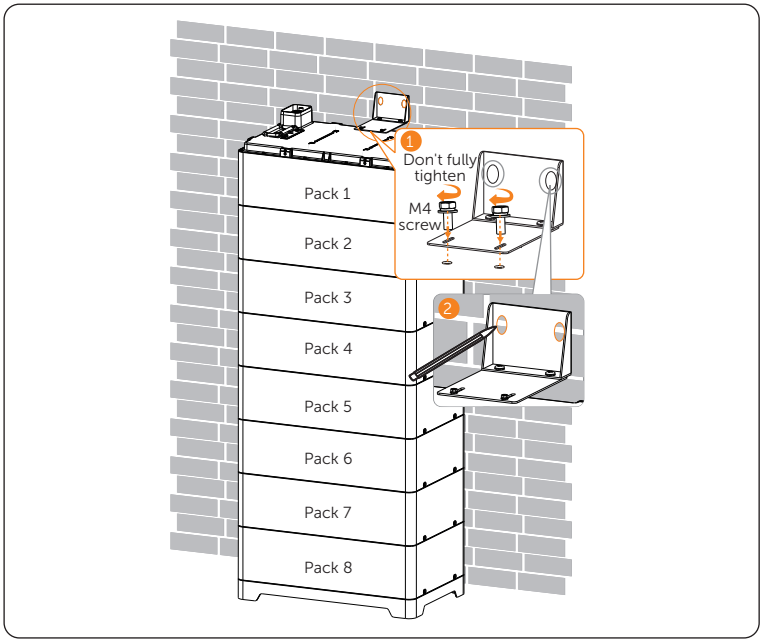

Figure 7-10 Drawing circles

NOTICE!

- Please make sure that the corners and edges of the battery packs are aligned before tightening screws.

Step 9: Remove the assembled bracket, and drill holes. (Drill bit: Ø 10mm; Drill depth: ≥ 50 mm)

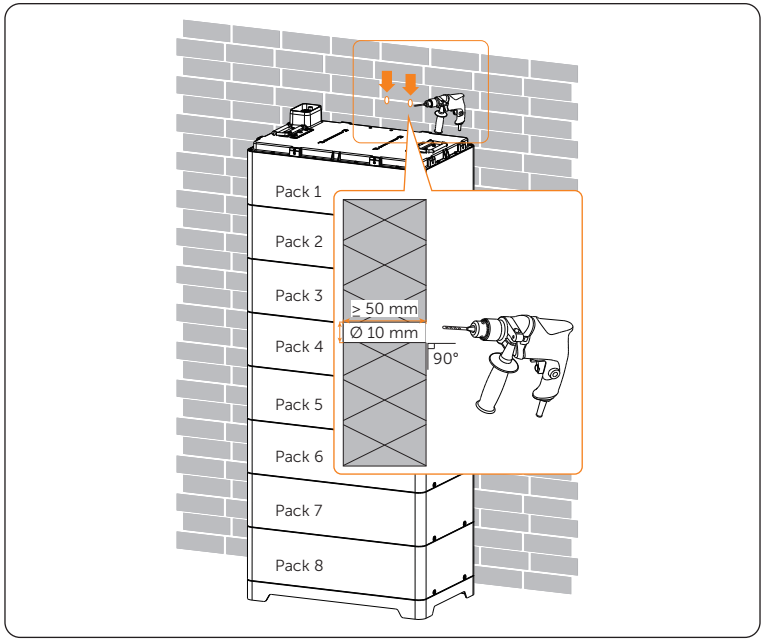

Figure 7-11 Drilling holes

NOTICE!

- An electric drill dust collector is recommended.
- To prevent dust from being released into the connector when drilling holes, users may use the package bag of the battery pack or other materials to fully cover it.

Step 10: Insert the expansion bolt (Part D) by using rubber, and ensure that the entire expansion bolt is driven into the wall. (Expansion bolt: 2 pieces)

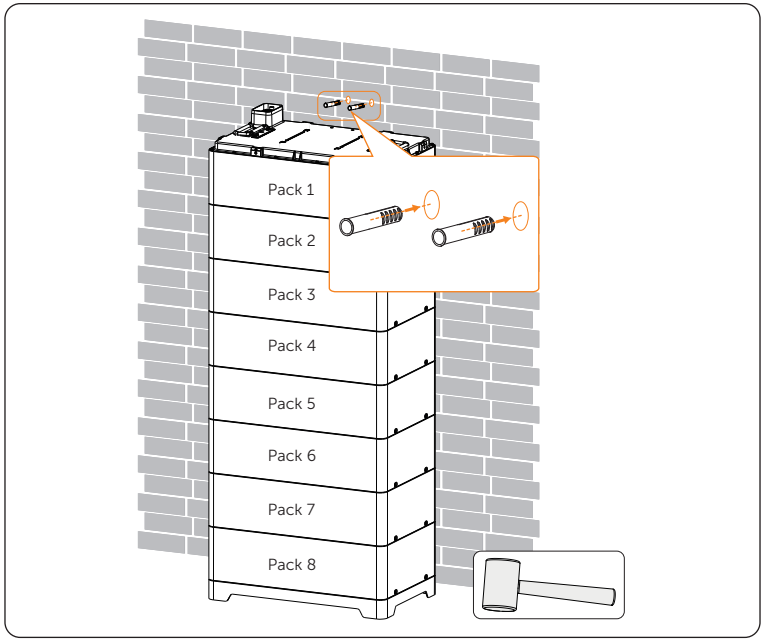

Figure 7-12 Inserting expansion bolt

Step 11: Place the assembled bracket on the battery pack again, insert the self-tapping screw (Part E) to secure it on the wall but not tighten it, and tighten M5 screws to secure brackets, as well as M4 screws on the battery pack. Finally, tighten the self-tapping screws. (Torque for self-tapping screw: 6-8 N·m; torque for M5: 1.3-1.5 N·m; torque for M4: 0.9-1.1 N·m)

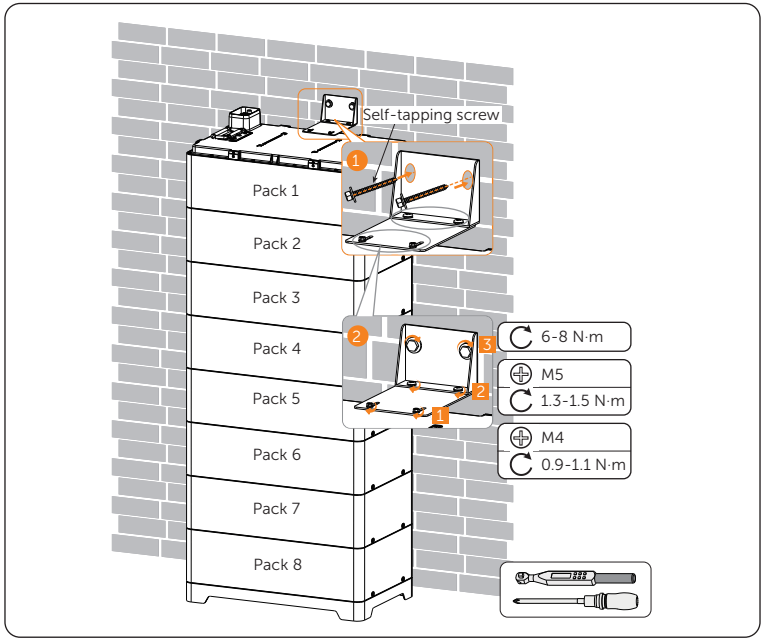

Figure 7-13 Securing assembled bracket

Step 12: Place the BMS, and correctly insert and tighten the M5*14 Phillips cheese head screw (Part F) to secure the base and battery pack. (M5: 4 pieces) (Torque for M5: 1.3-1.5 N·m)

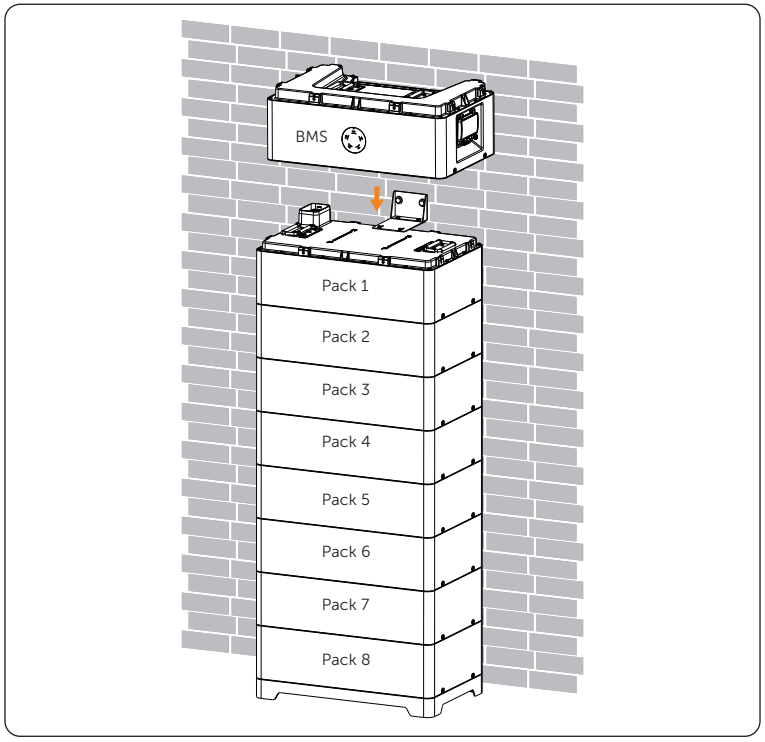

Figure 7-14 Placing BMS

NOTICE!

- Gently press the BMS before tightening screws to make sure that the connectors are tightly connected.

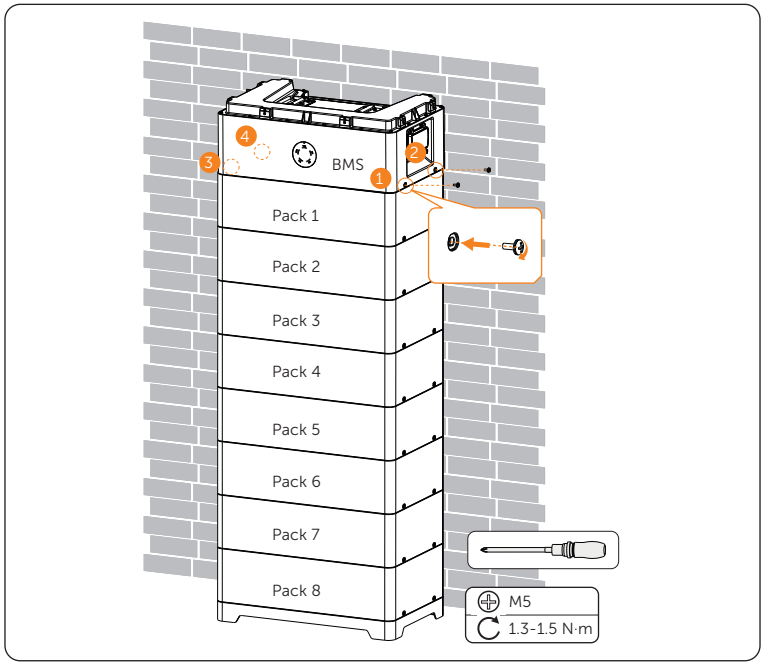

Figure 7-15 Tightening M5 screw

NOTICE!

- Please make sure that the corners and edges between the battery pack and BMS are aligned before tightening screws.
- Both the cable guard cover and BMS cover should be installed during wiring.
- It is recommended to insert and secure the screws on one side, and then fully tighten them after the screws on the other side are fully tightened.

Step 13: Repeat steps 1 to 12 to install the remaining battery packs and series box/series box(TB-HS51O).

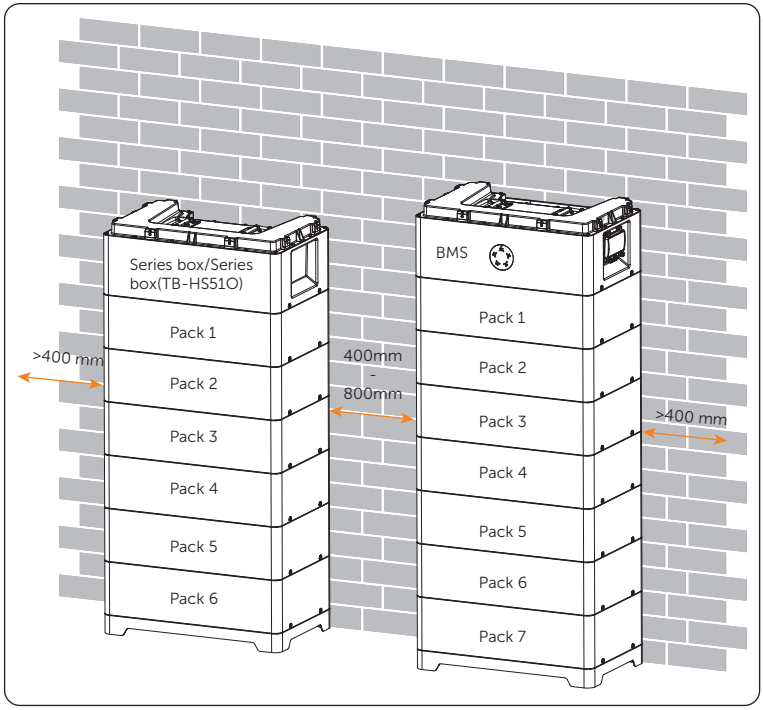

Figure 7-16

NOTICE!

- Please make sure that the corners and edges between the battery pack and series box/series box(TB-HS51O) are aligned before tightening screws.
- Gently press the series box/series box(TB-HS51O) before tightening screws to make sure that the connectors are tightly connected.
- Both the cable guard cover and BMS cover should be installed during wiring.
- It is recommended to insert and secure the screws on one side, and then fully tighten them after the screws on the other side are fully tightened.

7.2 Electrical Wiring

CAUTION!

- It's important to give the cables a health check before connection.

Cables between the BMS and inverter, and the BMS and series box/series box(TB-HS51O), as shown in the following figure.

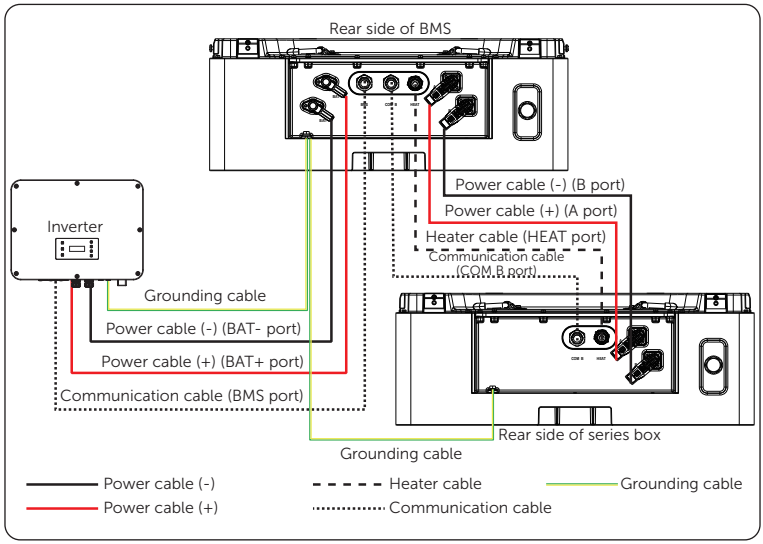

Figure 7-17 Wiring diagram

Regarding the cables shown in the Figure 7-17, see the following table.

Table 7-4 Cable information

	Cable	Length	Description
Power cable (+) (standard)		2000 mm	"BAT+" port of BMS → "BAT+" port of inverter
Power cable (-) (standard)		2000 mm	"BAT-"port of BMS → "BAT-" port of inverter
Communication cable c(standard)		2000 mm	"BMS"port of BMS → "BMS" port of inverter
Grounding cable	/	/	"⏚" port of BMS → "⏚" port of inverter. Please refer to "4.4 Additionally Required Materials" for details.

	Cable	Length	Description
Power cable (+) (standard)		2000mm	"A" port of BMS → "A" port of series box/ series box(TB-HS51O)
Power cable (-) (standard)		2000mm	"B" port of BMS → "B" port of series box/ series box(TB-HS51O)
Communication cable c(standard)		2200mm	"COM B" port of BMS → "COM B" port of series box/series box(TB-HS51O)
Heater cable (standard)		2200mm	"HEAT" port of BMS → "HEAT" port of series box/series box(TB-HS51O)
Grounding cable (standard)		2200mm	" ⏚ " port of BMS → " ⏚ " port of series box/series box(TB-HS51O)
Power cable (+) (optional)		2200 mm	"BAT+" port of BMS → "BAT+" port of inverter
Power cable (-) (optional)		2200 mm	"BAT-"port of BMS → "BAT-" port of inverter

NOTICE!

- The end of cables that will be connected to inverters are bare upon delivery with the battery, and need external connector for connecting inverters.

7.2.1 PE Connection

DANGER!

- Make sure that the PE cable is securely connected.
- Failure to follow these instructions can result in death or serious injury.

NOTICE!

- In case of a rated current of 30 A, the wire size of 6 mm^2 for cables (including grounding cable) is recommended; in case of a rated current of 60 A, the wire size of 10 mm^2 for cables (grounding cable) is recommend.
- The grounding cable should be prepared by the users themselves.

A PE cable should be connected between the inverter and BMS, the steps for making PE connection are shown as follows:

Step 1: Strip the cable jacket about 8 to 10 mm from the end.

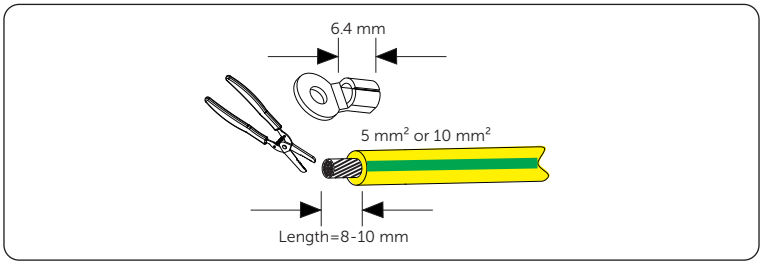

Figure 7-18 Striping cable jacket

NOTICE!

- It's necessary to use controlled motion to strip the insulation down the wire, to prevent damage to the wires.
- Make sure that the insulation layer has been stripped to a sufficient length so that the center conductor is fully exposed without any damage or nicks. In addition, make sure that no extra insulation remains beyond the connector once it's crimped on.

Step 2: Cut the heat-shrink tubing to about 28 to 30 mm length, carefully slide it onto the end of the cable, and then carefully slip the wires all the way into the ring terminal (Part K or Part E4).

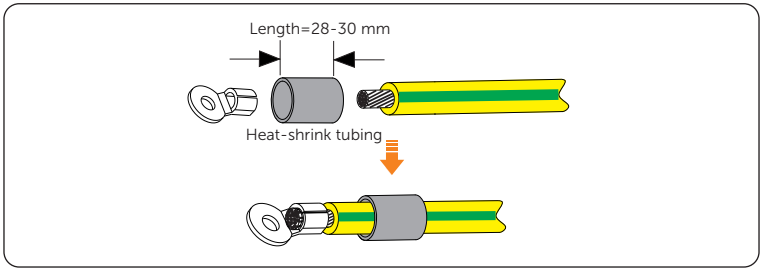

Figure 7-19 Cutting heat-shrink tubing

Step 3: Crimp the terminal, and heat the heat-shrink tubing after it wraps the end of terminal.

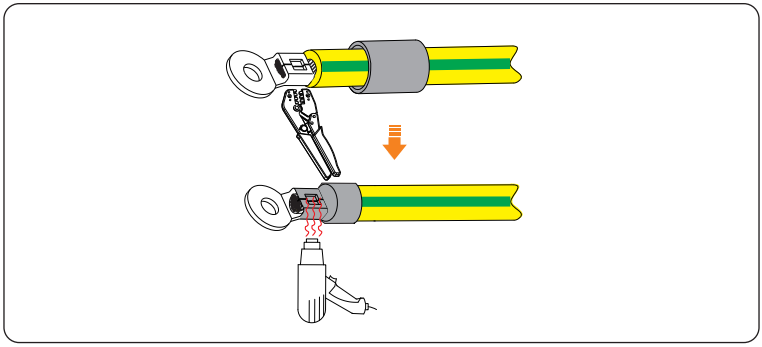

Figure 7-20 Crimping and heating

NOTICE!

- Do not place the conductor insulation into the terminal.
- Do not damage the conductor insulation while crimping.
- Move the heat gun back and forth slowly to distribute the heat evenly across the surface of heat shrink tubing.

Step 4: Unscrew the M5 screw, connect the assembled grounding cable to the grounding port of the battery pack, and then tighten M5 screw. (Torque for M5: 2.5-2.8 N·m).

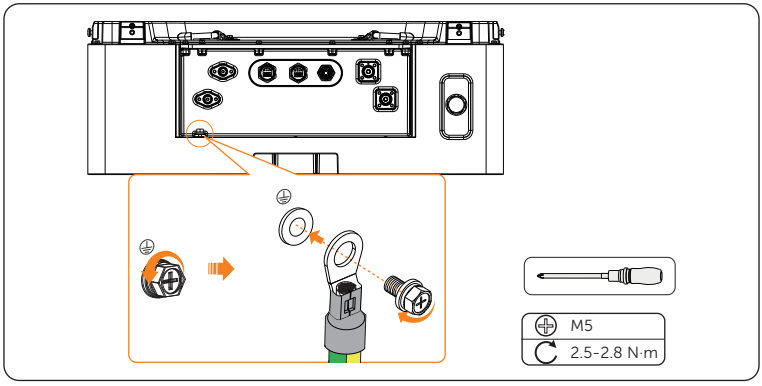

Figure 7-21 Tightening M5 screw

7.2.2 Communication Connection

To ensure normal operation between the battery pack and inverter, the end of the communication cable connecting to the inverter is required to make a RJ45 connector.

Make sure that the "BMS" port on the BMS connects to the inverter is Pin to Pin. The "BMS" port pin assignment is shown as follows:

Table 7-5 "BMS" port pin assignment

PIN	1	2	3	4	5	6	7	8
BMS	/	GND	GND	CAN-H	CAN-L	/	485A	485B

The wire sequence is shown as follows:

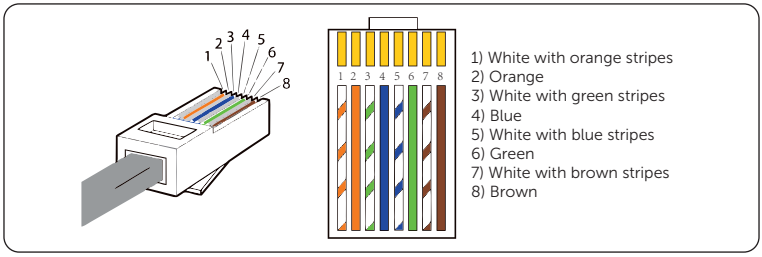

Figure 7-22 Wire sequence

Regarding the steps for making RJ45 connector to the communication cable (Part J), please do as follows:

Step 1: Rotate anti-clockwise to unscrew the waterproof cap, and strip the cable jacket about 15 mm down from the end.

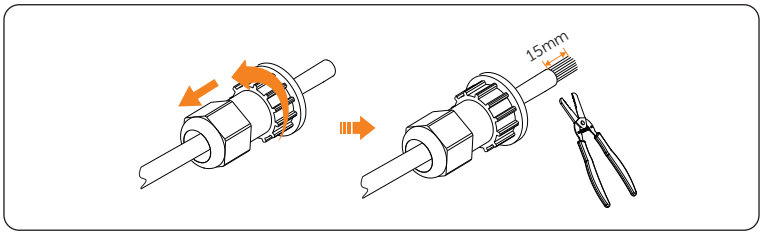

Figure 7-23 Stripping cable jacket

Step 2: Thread the cable through the waterproof cap, and carefully insert the wires all the way into the RJ45 connector, making sure that each wire passes through the appropriate guides inside the connector.

Step 3: Push the RJ45 inside the crimping tool and squeeze the crimper all the way down.

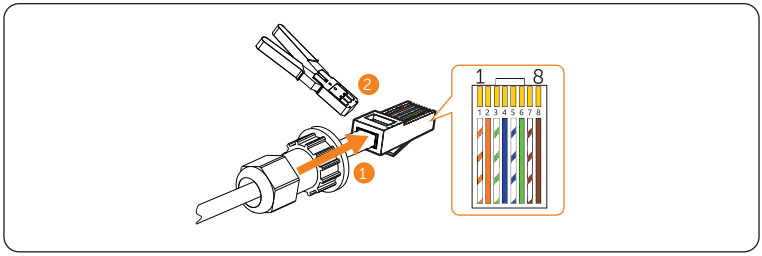

Figure 7-24 Crimping RJ45

Step 4: Rotate clockwise to tightening the waterproof cap after connecting to the inverter.

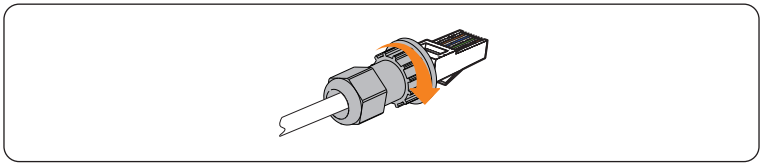

Figure 7-25 Rotating waterproof cap

NOTICE!

- The communication cable shall have a shield layer.
- The RJ45 and waterproof cap are delivered with the "Accessery Kit for Inverter". Regarding the detailed installation procedure, please refer to the inverter's *User Manual*.

The wire sequence of one terminal connecting to the series box/series box(TB-HS51O) is the same as the wire sequence of the other terminal connecting to the battery pack. The communication cable wire sequence is shown as follows:

Table 7-6 Communication cable wire sequence

PIN	1	2	3	4	5	6	7	8
COM B	/	/	/	CAN-H	CAN-L	/	12V	GND

7.2.3 Cable Connection among BMS, Series Box/Series box(TB-HS51O) and Inverter

WARNING!

- Only the qualified personnel can perform the wiring.
- Follow this manual to wire connection. The device damage caused by incorrect cabling is not in the scope of warranty.

CAUTION!

- Use insulated tools and wear individual protective tools when connecting cables.
- The short power cable, short-circuit plug, and waterproof cap will be connected before delivery. In that case, do not remove them.

NOTICE!

- Before wiring, one end of the following cables connecting to the inverter, positive and negative power cables, and communication cable, should be made with a connector.
- If the number of battery packs is ≥ 7, the wiring can be conducted first before installing the BMS.

Step 1: Press and hold button lock to unplug the short power cable.

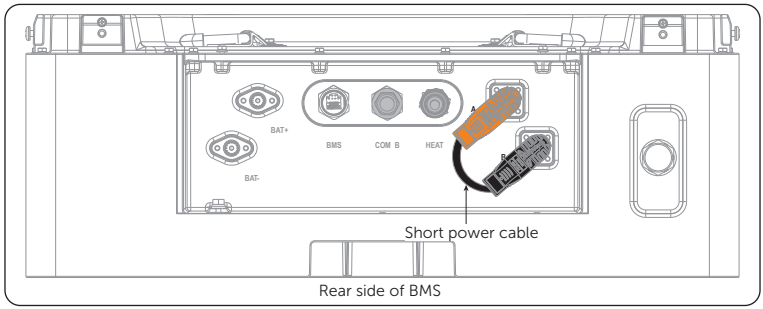

Figure 7-26 Unplugging cable

CAUTION!

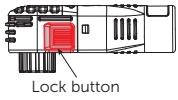

Figure 7-27 Connector on power cable

- Don't violently remove the power cables when they are locked. Otherwise, the connectors will be damaged.
- Press and hold the lock button to unplug the power cable.

Step 2: Rotate anti-clockwise to remove the waterproof cap, as well as the short-circuit plug.

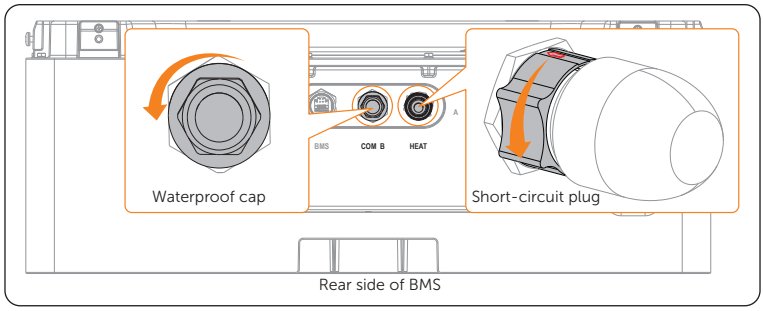

Figure 7-28 Removing waterproof cap and short-circuit plug

NOTICE!

- Don't violently remove the short-circuit plug.
- When the arrow on the rotating ring is aligned with the arrow on the port, the short-circuit plug can be removed.

Step 3: Take out the cable guard cover (Part G).

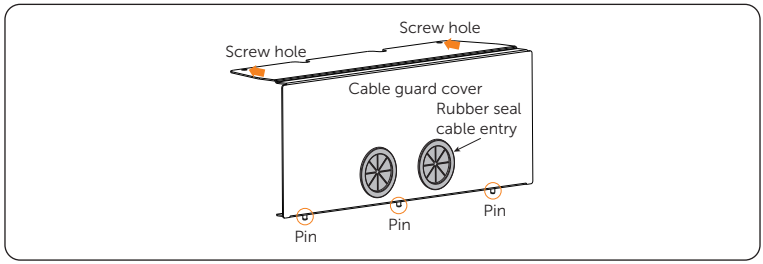

Figure 7-29 Details of cable guard cover

Step 4: Thread the cables through the rubber seal cable entry.

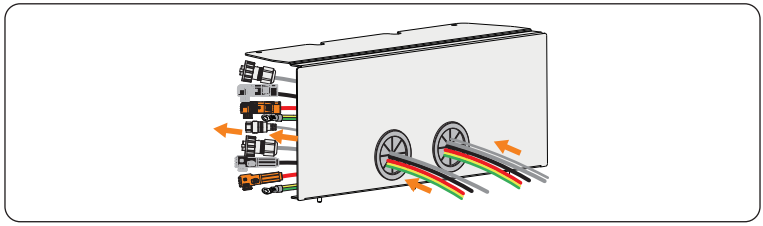

Figure 7-30 Threading cables

Step 5: Connect grounding cable to the inverter, see "7.2.1 PE Connection".

Step 6: Plug the positive power cable (Part H) to connect: "BAT+" port of the BMS and the "BAT+" port of the inverter;
Plug the negative power cable (Part I) to connect: "BAT-" port of the BMS and the "BAT-" port of the inverter;
Plug the communication cable (Part J) into the "BMS" port on the BMS and " BMS" port on the inverter, and tighten the cable by using rotation wrench (Part L).

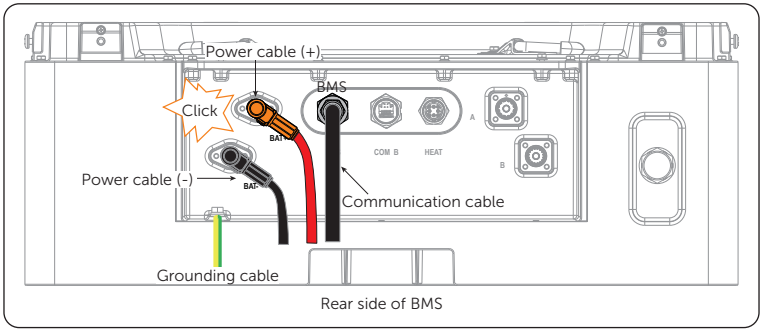

Figure 7-31 Connecting cables to inverter

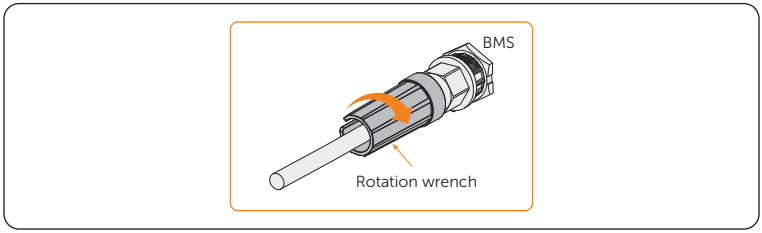

Figure 7-32 Closing communication cable

CAUTION!

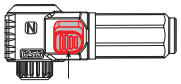

Figure 7-33 Connector on power cable

- Don't violently remove the power cables when they are locked. Otherwise, the connectors will be damaged.
- Press and hold the lock button to unplug the power cable.

Step 7: Turn the rotating ring to keep the arrow on it and the arrow on the connector body in a straight line, then align to the port's groove to plug the heater cable (Part K2) to connect the "HEAT" port of the BMS and the "HEAT" port of the series box/ series box(TB-HS51O). Finally, rotate the rotating ring clockwise to tighten it.

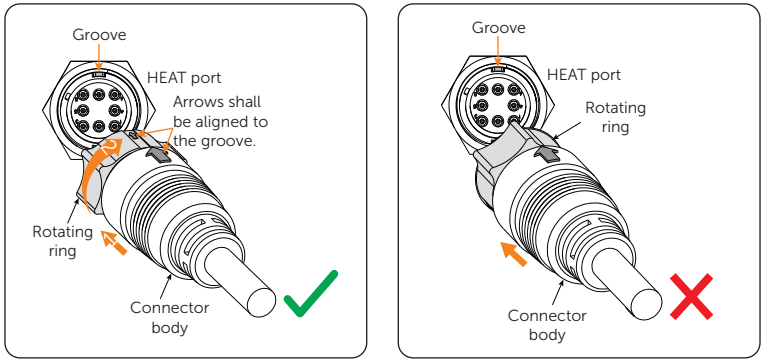

Figure 7-34 Plugging heater cable

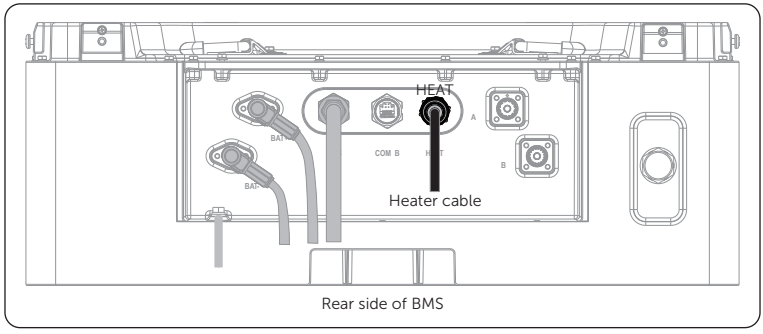

Figure 7-35 Diagram after installation of heater cable

Step 8: Connect grounding cable (Part L2) to the series box/series box(TB-HS51O);
Plug the positive power cable (Part H2) to connect: "A" port of the BMS and the "A" port of the series box/series box(TB-HS51O);
Plug the negative power cable (Part I2) to connect: "B" port of the BMS and the "B" port of the series box/series box(TB-HS51O);
Plug the communication cable (Part J2) to connect: "COM B" port of the BMS and "COM B" port of the series box/series box(TB-HS51O), and tighten the cable by using rotation wrench (Part L).

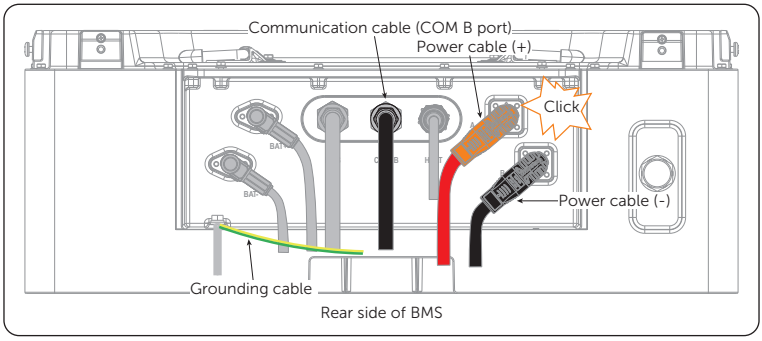

Figure 7-36 Connecting cables

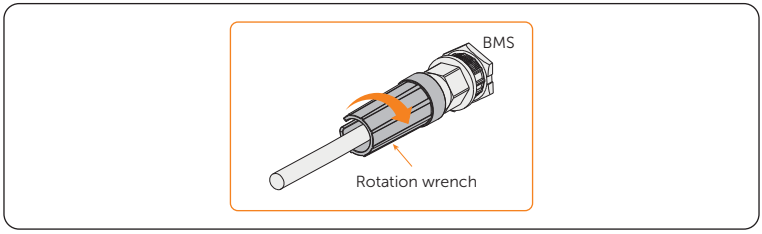

Figure 7-37 Closing communication cable

CAUTION!

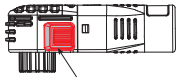

Figure 7-38 Connector on power cable

- Don't violently remove the power cables when they are locked. Otherwise, the connectors will be damaged.
- Press and hold the lock button to unplug the power cable.

Step 9: Insert such cover into holes on the BMS.

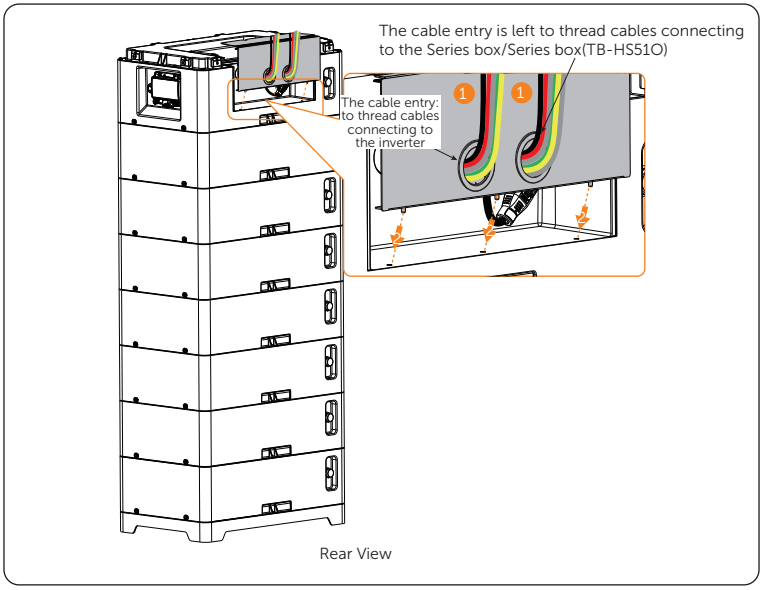

Figure 7-39 Inserting cable guard cover

Step 10: Correctly insert and tighten M4*10 Phillips screw (Part C) to secure such cover. (M4: 2 pieces) (Torque for M4: 0.9-1.1 N·m)

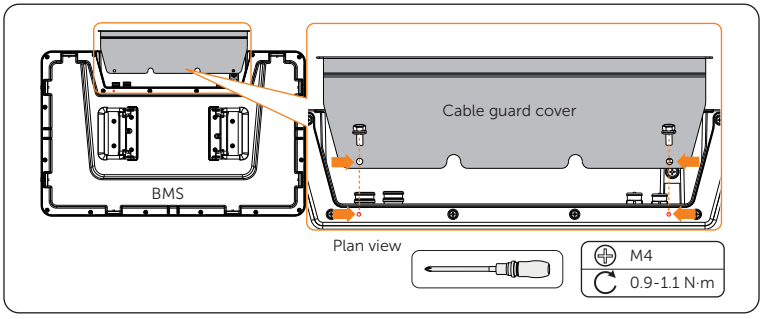

Figure 7-40 Tightening M4 screw

Step 11: Take out the cable guard cover (Part G2). Firstly, pull cables through the rubber seal cable entry on the cover. Secondly, insert the cover into the holes on the series box/series box(TB-HS51O), and then insert and tighten the M4*10 Phillips screw (Part C2) to secure it. (M4: 2 pieces) (Torque for M4: 0.9-1.1 N·m)

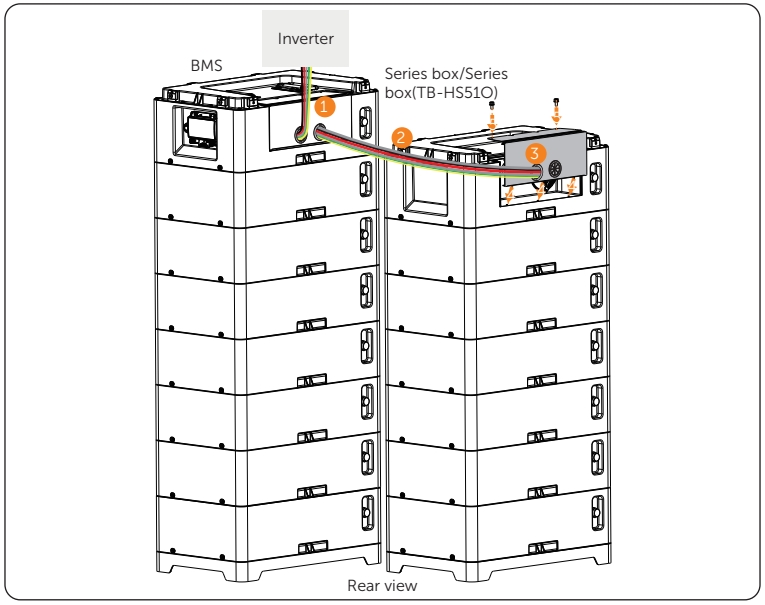

Figure 7-41 Pulling cables and securing cover

Step 12: Place the BMS cover and series box/series box(TB-HS51O) cover.

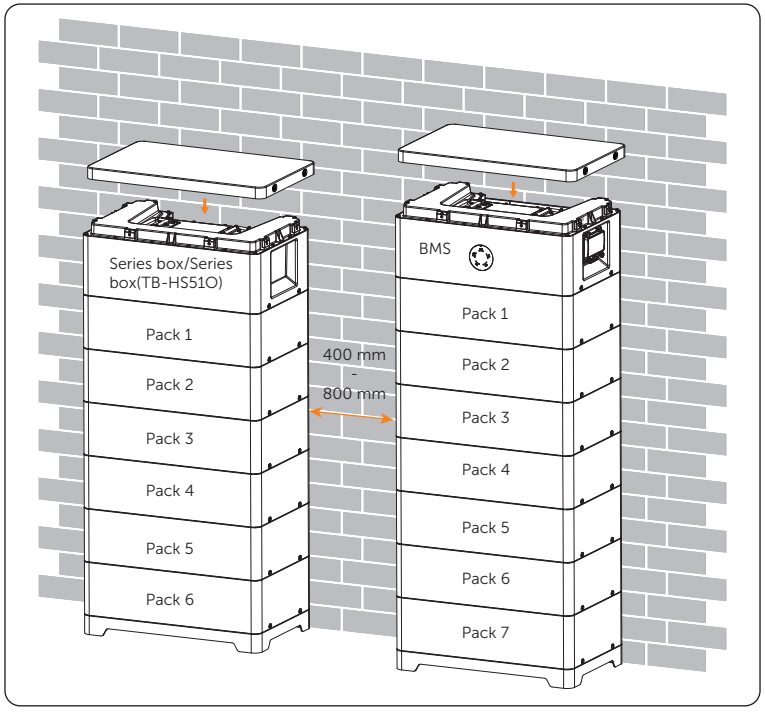

Figure 7-42 Placing covers

Step 13: Correctly insert and tighten the M5*14 Phillips cheese head screw (Part F) to secure the base and battery pack. (M5: 4 pieces) (Torque for M5: 1.3-1.5 N·m)

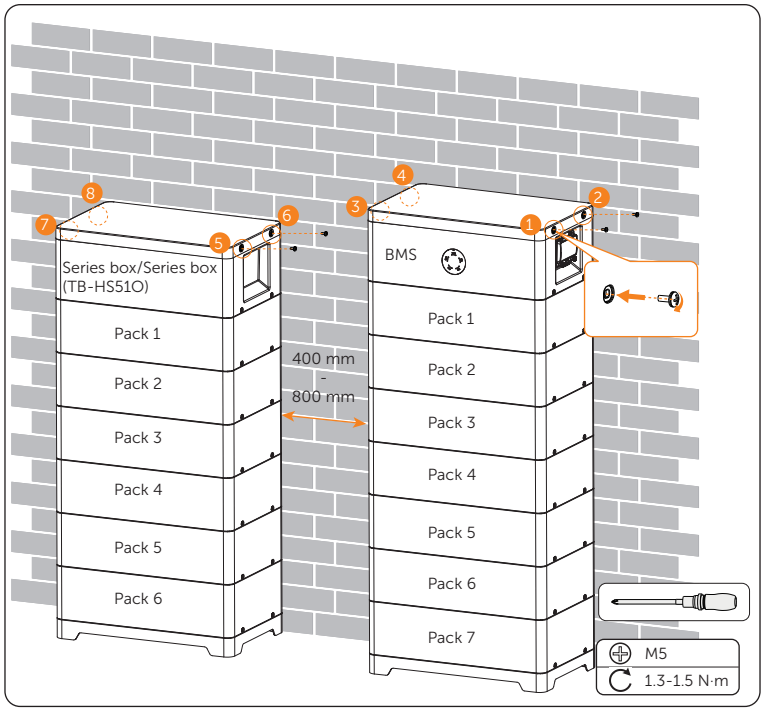

Figure 7-43 Tightening M5 screw

NOTICE!

- Please make sure that the corners and edges are aligned before tightening the screws.

8 System Commissioning

DANGER!

- Wear PPE and use insulated tools to avoid electric shocks or short circuits.

8.1 Checking before Power-on

- Check whether the device is installed correctly and securely;
- Make sure that the breaker is at "OFF" position;
- All cables are connected correctly and securely;
- All unconnected port are covered;
- The installation space is proper, and the installation environment is clean and tidy.

8.2 One-cluster System Power-on

Step 1: Turn the screws on the cover counter-clockwise, and flip down the switch to open the breaker cover.

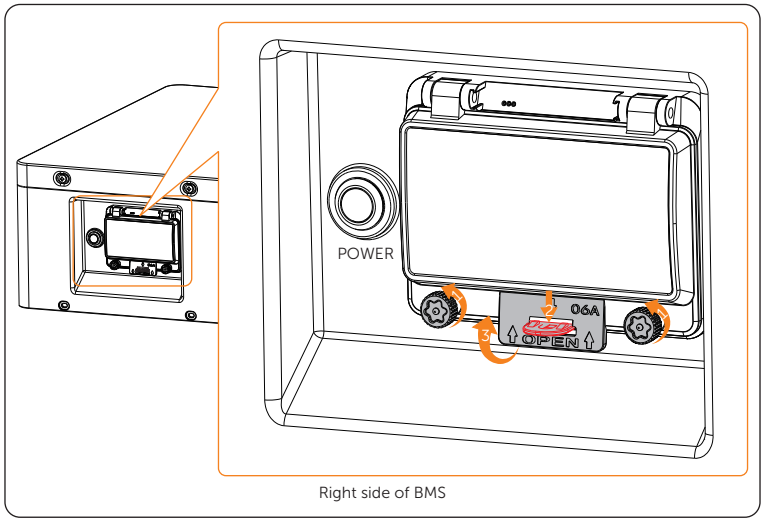

Figure 8-1 Opening cover

Step 2: Flip up the breaker, and hold and press the button for 1.5 seconds. In the meantime, the status light will flash yellow, and the SOC light will come on solid green. Finally, close the breaker cover.

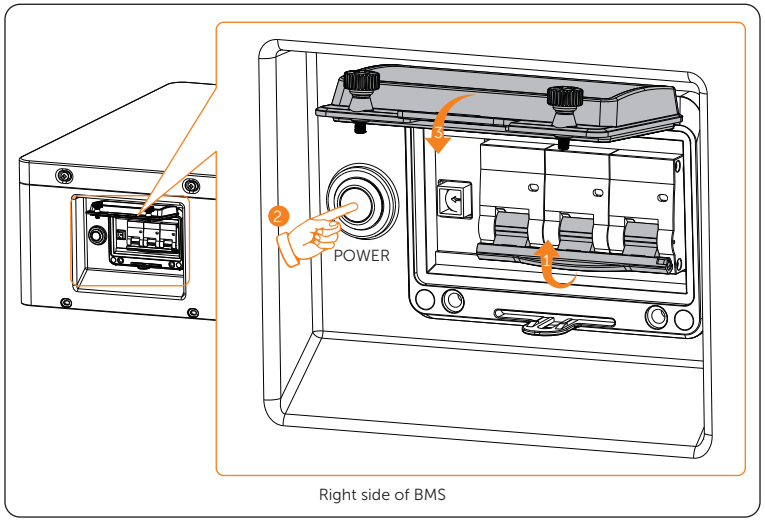

Figure 8-2 Flipping up the breaker and pressing the button

NOTICE!

- A system problem may be encountered while pressing the button frequently. The user may need to wait at least 10 seconds and then try again.

8.3 One-cluster System Power-off

Please follow the steps below to shut down the system.

Step 1: Please check that the inverter has been shut down.

Step 2: Turn the screws on the cover counter-clockwise, and flip down the switch to open the breaker cover.

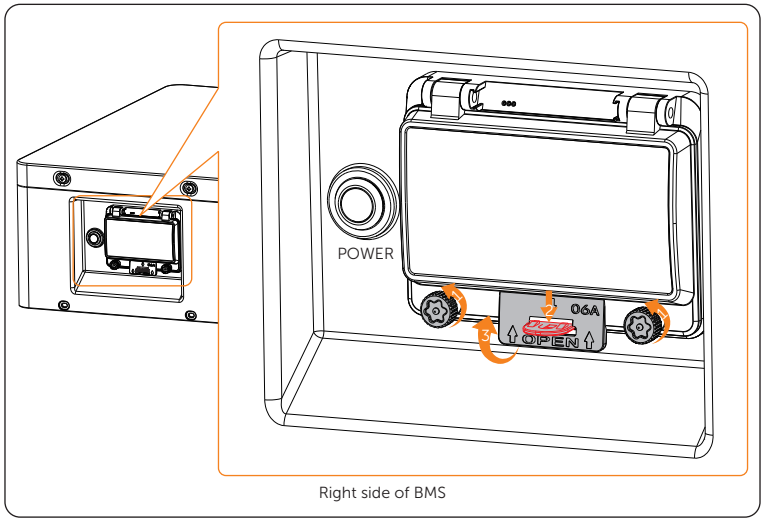

Figure 8-3 Opening cover

Step 3: Firstly, hold and press the button for 2 seconds. In the meantime, the status light will come on solid yellow, and the SOC light will come on solid green. And then both status light and SOC light are off.
Secondly, flip down the breaker, and close the cover.

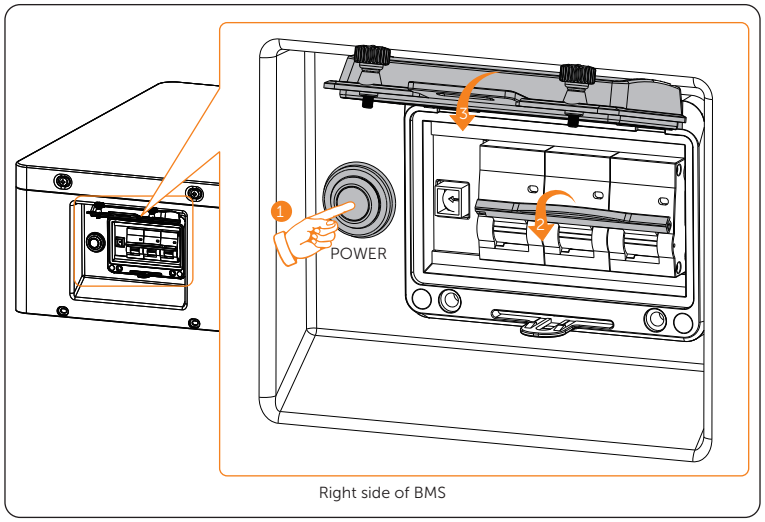

Figure 8-4 Pressing the button and flipping down the breaker

WARNING!

- The device may still have power and heat after turning off, which may cause electric shock and personal injuries. Therefore, please allow it to cool for at least 5 minutes and wear PPE before conducting maintenance.

9 Capacity Expansion and Parallel Connection

WARNING!

- The following content in the chapter only applies to the SolaX inverter.

9.1 Capacity Expansion

DANGER!

- Wear PPE and use insulated tools to avoid electric shocks or short circuits when increasing number of battery packs.

NOTICE!

- Please confirm that there is enough space to increase battery packs.
- Please make sure that the ground and wall where the additional battery packs will be installed can bear the weight.
- Take one tower with 4 battery packs, for instance.

If users want to increase **a battery pack** to achieve capacity expansion, please strictly follow steps below:

Step 1: Please check that the inverter has been shut down.

Step 2: Turn the screws on the cover counter-clockwise, and flip down the switch to open the breaker cover.

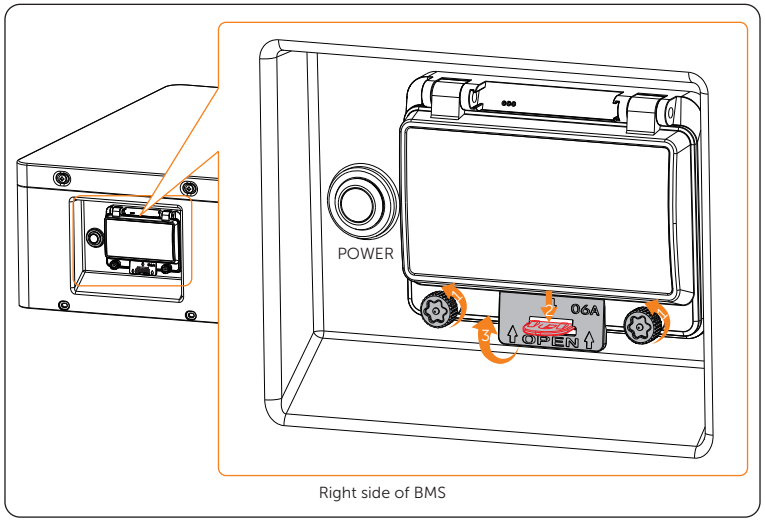

Figure 9-1 Opening cover

Step 3: Firstly, hold and press the button for 2 seconds. In the meantime, the status light will come on solid yellow, and the SOC light will come on solid green. And then both status light and SOC light are off.
Secondly, flip down the breaker, and close the cover.

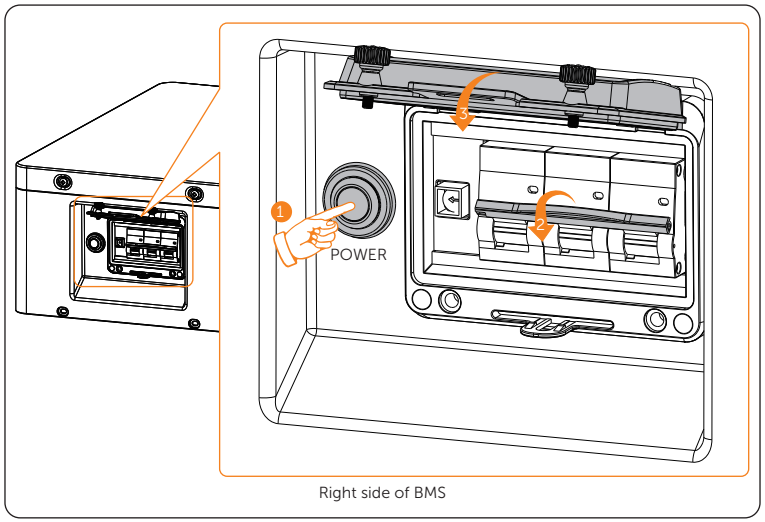

Figure 9-2 Pressing the button and flipping down the breaker

Step 4: Unscrew the M5*14 Phillips cheese head screw to remove the BMS cover. (M5: 4 pieces)

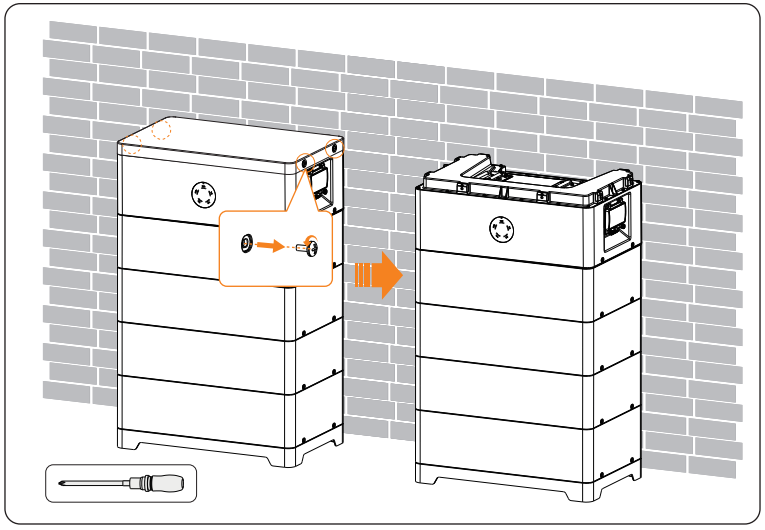

Figure 9-3 Removing BMS cover

Step 5: Unscrew the M4*10 Phillips screw to remove the cable guard cover. (M4: 2 pieces)

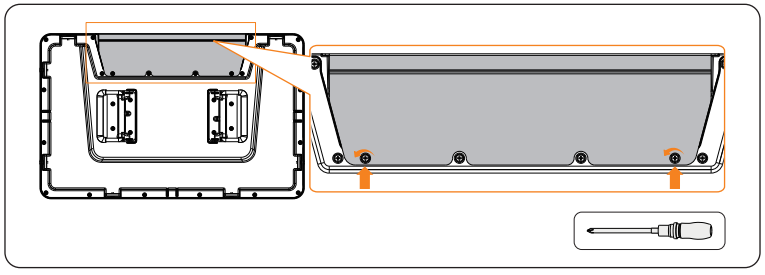

Figure 9-4 Removing cable guard cover

Step 6: Press and hold the lock button to unplug power cables

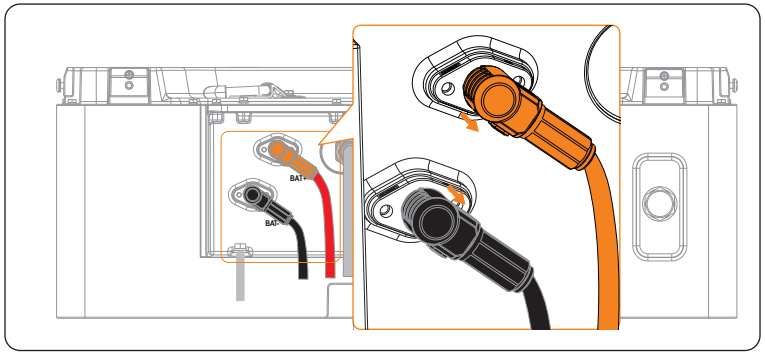

Figure 9-5 Unplugging power cable

CAUTION!

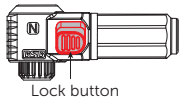

Figure 9-6 Connector on power cable

- Don't violently remove the power cables when they are locked. Otherwise, the connectors will be damaged.
- Press and hold the lock button to unplug the power cable.

Step 7: Place the rotation wrench onto the communication cable, and rotate anti-clockwise to unplug it.

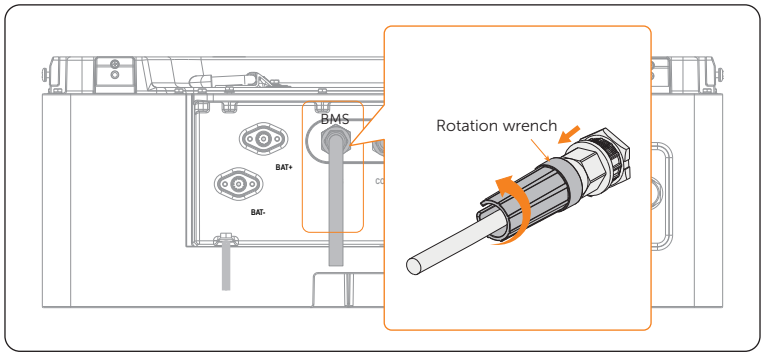

Figure 9-8 Unplugging communication cable

Step 8: Unscrew the M5 screw to disassemble the grounding cable.

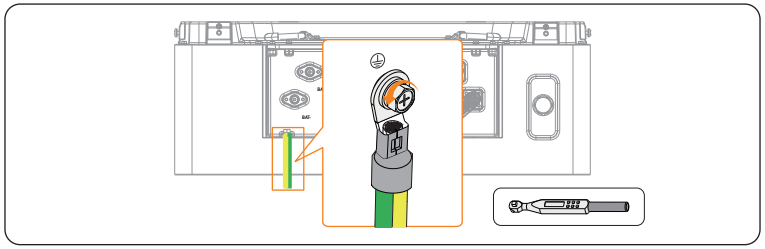

Figure 9-9 Disassembling grounding cable

Step 9: Unscrew the M5*14 Phillips cheese head screw to remove the BMS. (M5: 4 pieces)

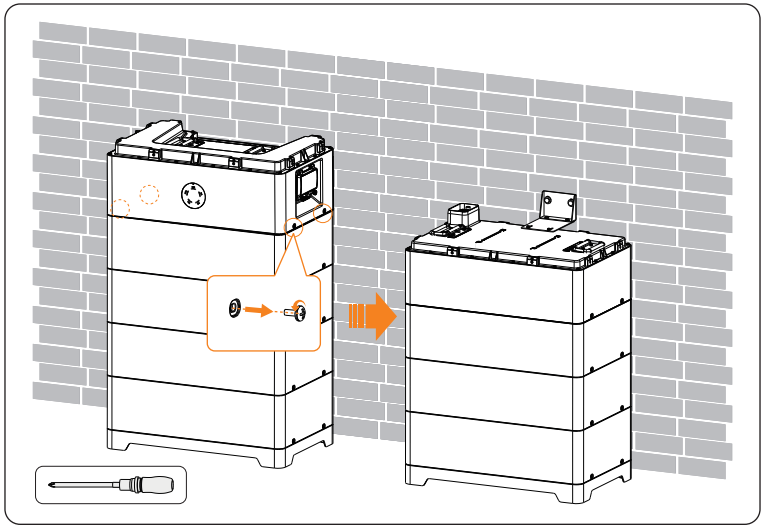

Figure 9-10 Removing BMS

Step 10: Unscrew self-tapping screw and M4*10 Phillips screw to remove the assembled bracket. (Self-tapping screw: 2 pieces; M4: 2 pieces)

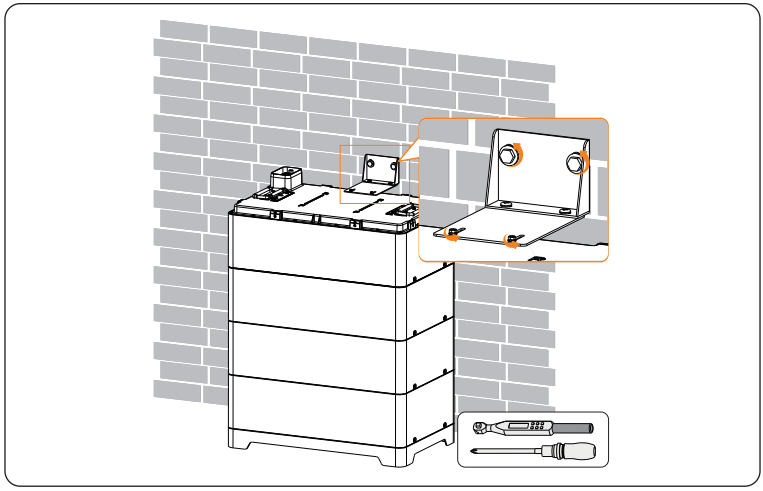

Figure 9-11 Removing assembled bracket

Step 11: If the user want to increase a battery pack, place a battery pack, and correctly insert and tighten the M5*14 Phillips cheese head screw (Part A1) to secure the battery packs. (M5: 4 pieces) (Torque for M5: 1.3-1.5 N·m)

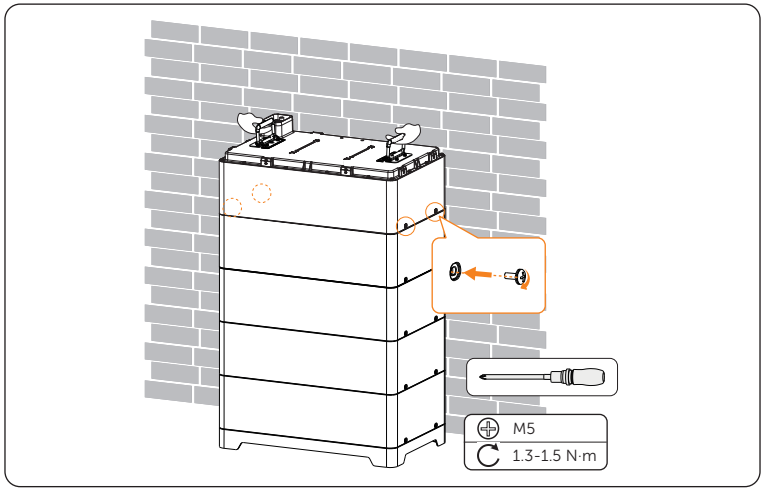

Figure 9-12 Placing battery pack and securing M5 screw

Step 12: Attach and secure the assembled bracket, place the BMS, cable guard cover and BMS cover, and correctly connect cables. For the detailed steps,
In the case of one tower after capacity expansion, please refer to "6 Installation and Wiring about One Tower".
In the case of two towers after capacity expansion, please refer to "7 Installation and Wiring about Two Towers".

9.2 Parallel Connection

To render it highly suitable for scenarios that demand ample capacity, the battery pack supports to be connected in parallel.

10 Troubleshooting and Maintenance

10.1 Maintenance

Regular maintenance is required for the device. The table below lists the operational maintenance for expressing the optimum device performance. More frequent maintenance service is needed in the worse work environment. Please make records of the maintenance.

WARNING!

- Only qualified person can perform the maintenance for the device.
- Wear PPE before conducting maintenance.

CAUTION!

- The system must be powered off before conducting maintenance works, for instance, system cleaning, electrical connections, grounding cable checks.

Table 10-1 Maintenance list

Check Item	Description	Period
Running status of the system	• Check whether there is any damage or deformation to the device. • Check whether there are any abnormal noise in the running system.	Every 6 months
Electrical connections	• Check whether the cables are fastened securely. If not, please tighten them again according to the torque written in the document. • Check there is any damage to the cables, especially the cable jacket connecting with the metal parts. • Check whether the unconnected ports are covered.	The first maintenance should be scheduled within half a year after the first commissioning, and then check them every 6-12 months.
Grounding cable checks	• Check whether the grounding cable is firmly attached.	The first maintenance should be scheduled within half a year after the first commissioning, and then check them every 6-12 months.

10.2 Troubleshooting

This section lists the possible problems with the device, and provides information and procedures for identifying and resolving them. In case of any errors, users can:

- Log in the cloud platform (www.solaxcloud.com) to check for the warnings or error messages, and then solve it according to the following table;
- Check for the warnings or error messages through the inverter; or
- Contact the company's after-sales personnel to solve it.

For further assistance, contact SolaX Customer Service. Please provide the model and SN of the device, and be prepared to describe the system installation details.

Table 10-2 Troubleshooting information

Fault	Description	Diagnosis & Solution
Internal communication fault	Abnormal communication between the battery pack and BMS	Abnormal communication between the battery pack and BMS: • Contact the company's after-sales personnel.
Cell overvoltage	Battery cell overvoltage	Battery cell overvoltage: • Contact the company's after-sales personnel.
Overvoltage of total voltage	Overvoltage of battery's total voltage	Overvoltage of battery's total voltage: • Contact the company's after-sales personnel.
Cell undervoltage	Battery cell undervoltage	Battery cell undervoltage: • Contact the company's after-sales personnel.
Undervoltage of total voltage	Undervoltage of battery's total voltage	Undervoltage of battery's total voltage: • Battery is force to charge through inverter; • Contact the company's after-sales personnel.
Charge overcurrent	Charge overcurrent of battery pack	Charge overcurrent of battery pack: • Restart the BMS; • Contact the company's after-sales personnel.
Discharge overcurrent	Discharge overcurrent of battery pack	Discharge overcurrent of battery pack: • Restart the BMS; • Contact the company's after-sales personnel.

Fault	Description	Diagnosis & Solution
High temperature	High temperature of battery pack	The temperature of battery pack is too high: • It is suggested to shut down the device, and then restart it after it returns to normal temperature; • Contact the company's after-sales personnel.
Low temperature	Low temperature of battery pack	The temperature of battery pack is too low: • It is suggested to shut down the device, and then restart it after it returns to normal temperature; • Contact the company's after-sales personnel.
Insulation fault	Low insulation resistance	Low insulation resistance" • Contact the company's after-sales personnel.
Voltage sensor fault	Voltage sensor fault	Voltage sampling fault of the BMS: • Restart the BMS; • Contact the company's after-sales personnel.
Cell temperature fault	Cell temperature sampling fault of battery pack	Cell temperature sampling fault of the battery pack: • Restart the BMS; • Contact the company's after-sales personnel.
Current sensor fault	Current sampling fault of the BMS	Current sampling fault of the BMS: • Restart the BMS; • Contact the company's after-sales personnel.
Relay fault	Relay contact adhesion	Relay contact adhesion: • Restart the BMS; • Contact the company's after-sales personnel.
Precharge fault	Precharge fault of the battery pack	Precharge fault of the battery pack: • Check the wires between the BMS and inverter are connected properly; • Contact the company's after-sales personnel.
Breaker fault	Breaker disconnection of the BMS	Breaker disconnection of the BMS: • Check the breaker state, and then restart the BMS; • Contact the company's after-sales personnel.

Fault	Description	Diagnosis & Solution
System fault	Battery system fault	Battery system fault: • Check the breaker; • Contact the company's after-sales personnel.
Battery cell sampling fault	Contact separation of battery cell sampling	Contact separation of battery cell sampling: • Restart the BMS; • Contact the company's after-sales personnel.

11 Decommissioning

11.1 Disassembly of Cables

WARNING!

- Only the qualified personnel can perform disassembly of cables.
- To avoid electric shocks, use insulated tools and wear individual protective tools when disassembly of cables.

NOTICE!

- Take one tower, for instance.

Step 1: Please check that the inverter has been shut down.

Step 2: Turn the screws on the cover counter-clockwise, and flip down the switch to open the breaker cover.

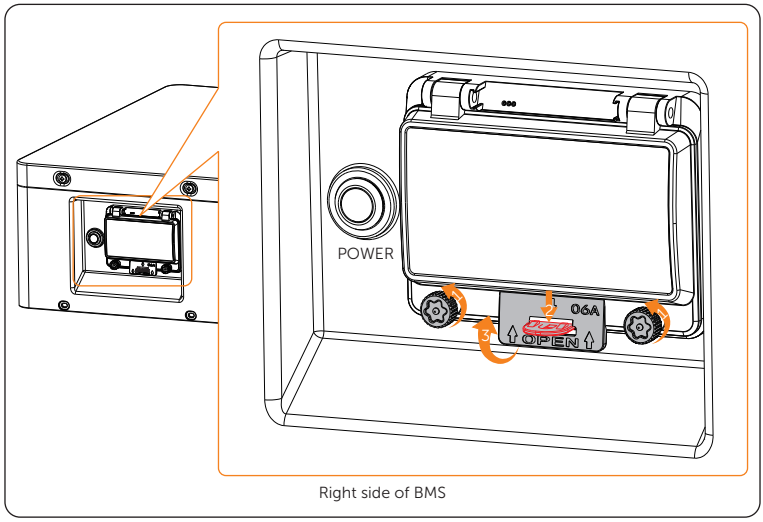

Figure 11-1 Opening cover

Step 3: Firstly, hold and press the button for 2 seconds. In the meantime, the status light will come on solid yellow, and the SOC light will come on solid green. And then both status light and SOC light are off.
Secondly, flip down the breaker, and close the cover.

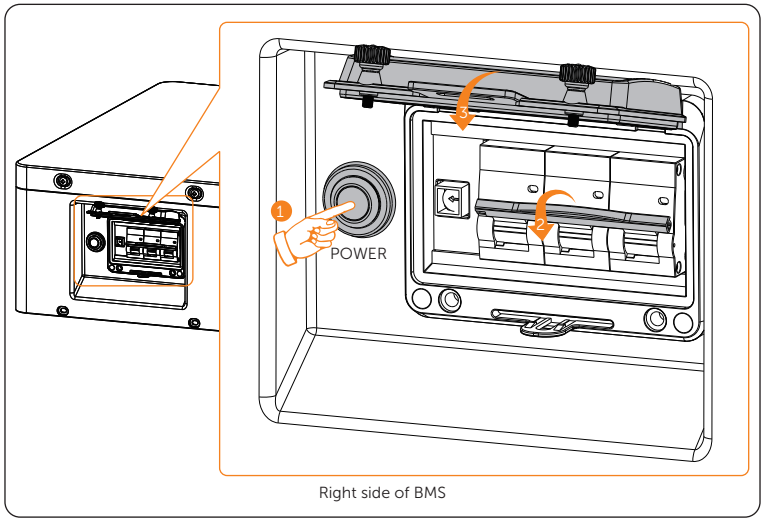

Figure 11-2 Pressing the button and flipping down the breake

Step 4: Press and hold the lock button to unplug power cables

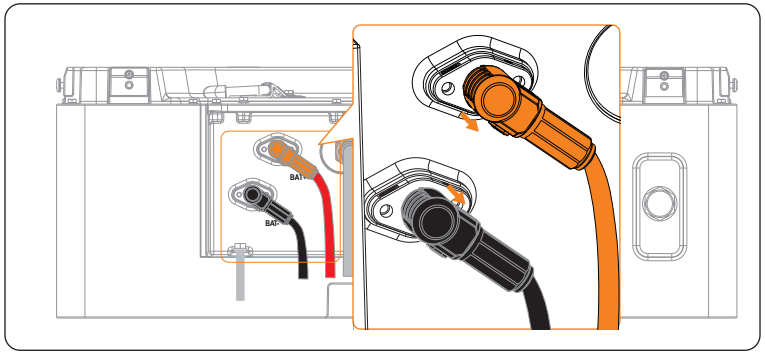

Figure 11-3 Unplugging power cable

CAUTION!

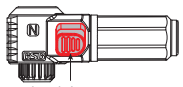

Figure 11-4 Connector on power cable

- Don't violently remove the power cables when they are locked. Otherwise, the connectors will be damaged.
- Press and hold the lock button to unplug the power cable.

Step 5: Place the rotation wrench onto the communication cable, and rotate anti-clockwise to unplug it.

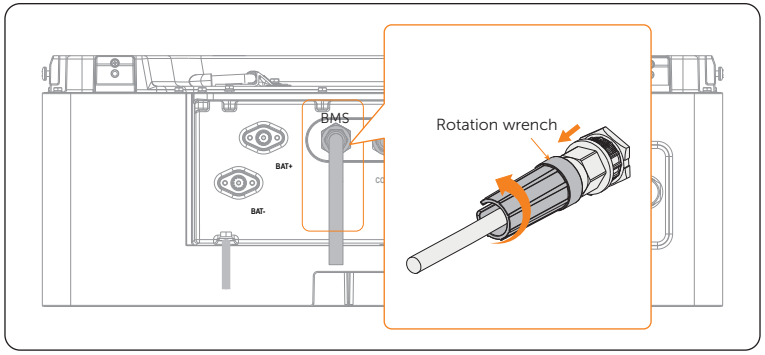

Figure 11-5 Unplugging communication cable

Step 6: Unscrew the screws to disassemble the grounding cable.

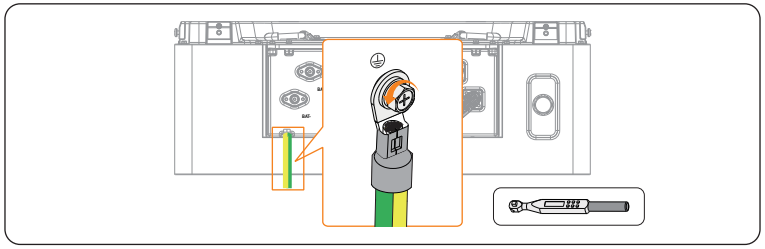

Figure 11-6 Disassembling grounding cable

11.2 Packing

- Load the BMS and battery packs into the original packing material if possible.
- If the original packing material is not available, you can also use the packing material which meets the following requirements:
  - » Suitable for the weight of product;
  - » Easy to carry;
  - » Be capable of being closed completely.

12 Technical Data

Configuration List

No.	Model	BMS	Battery pack	Nominal Energy (kWh)	Operating Voltage (Vdc)
1	T-HS10.2	TBMS-S51-8/TBMS-S51-8O × 1	TB-HS51/TB-HS51O × 2	10.2	85-116
2	T-HS15.3	TBMS-S51-8/TBMS-S51-8O × 1	TB-HS51/TB-HS51O × 3	15.3	128-174
3	T-HS20.4	TBMS-S51-8/TBMS-S51-8O × 1	TB-HS51/TB-HS51O × 4	20.4	170-232
4	T-HS25.6	TBMS-S51-8/TBMS-S51-8O × 1	TB-HS51/TB-HS51O × 5	25.6	212-289
5	T-HS30.7	TBMS-S51-8/TBMS-S51-8O × 1	TB-HS51/TB-HS51O × 6	30.7	255-347
6	T-HS35.8	TBMS-S51-8/TBMS-S51-8O × 1	TB-HS51/TB-HS51O × 7	35.8	297-405
7	T-HS40.9	TBMS-S51-8/TBMS-S51-8O × 1	TB-HS51/TB-HS51O × 8	40.9	340-463
8	T-HS46.0	TBMS-S51-8/TBMS-S51-8O × 1	TB-HS51/TB-HS51O × 9	46.0	382-520
9	T-HS51.2	TBMS-S51-8/TBMS-S51-8O × 1	TB-HS51/TB-HS51O × 10	51.2	424-578
10	T-HS56.3	TBMS-S51-8/TBMS-S51-8O × 1	TB-HS51/TB-HS51O × 11	56.3	467-636
11	T-HS61.4	TBMS-S51-8/TBMS-S51-8O × 1	TB-HS51/TB-HS51O × 12	61.4	509-694
12	T-HS66.5	TBMS-S51-8/TBMS-S51-8O × 1	TB-HS51/TB-HS51O × 13	66.5	552-750

Performance Parameter

Item \ Module	T-HS10.2	T-HS15.3	T-HS20.4	T-HS25.6	T-HS30.7	T-HS35.8
Nominal Voltage (V)	102.4	153.6	204.8	256.0	307.2	358.4
Operating Voltage Range (V)	85-116	128-174	170-232	212-289	255-347	297-405
Nominal Capacity (Ah) [1]	100	100	100	100	100	100
Nominal Energy (kWh)[1]	10.2	15.3	20.4	25.6	30.7	35.8
Usable Energy 90% DOD (kWh)[2]	9.1	13.7	18.3	23.0	27.6	32.2
Max. Charge/Discharge Current (A)[3]	70	70	70	70	70	70
Nominal Power (kW) [5]	6.1	9.2	12.3	15.4	18.4	21.5
Max. Power (kW)	7.2	10.8	14.3	17.9	21.5	25.1
Short-circuit Current (A)	3981	3981	3981	3981	3981	3981
Battery Round-trip Efficiency (0.2 C, 25°C)	95%					
Expected Lifetime (25°C)	10 years					
Cycle Life 90% DOD (25°C)	6000 cycles					

Item \ Module	T-HS10.2	T-HS15.3	T-HS20.4	T-HS25.6	T-HS30.7	T-HS35.8
Charge Temperature	-30°C ~ 53°C (on heating function); 0°C ~ 53°C (off heating function) [4]					
Discharge Temperature	-30°C ~ 53°C (on heating function); -20°C ~ 53°C (off heating function) [4]					
Storage Temperature	-20°C ~ 30°C (12 months), 30°C ~ 50°C (6 months)					
Ingress Protection	IP66					
Relative Humidity (%)	4 ~ 100 (Condensing)					
Protection Class	I					

Item \ Module	T-HS40.9	T-HS46.0	T-HS51.2	T-HS56.3	T-HS61.4	T-HS66.5
Nominal Voltage (V)	409.6	460.8	512.0	563.2	614.4	665.6
Operating Voltage Range (V)	340-463	382-520	424-578	467-636	509-694	552-750
Nominal Capacity (Ah) [1]	100	100	100	100	100	100
Nominal Energy (kWh) [1]	40.9	46.0	51.2	56.3	61.4	66.5
Usable Energy 90% DOD (kWh) [2]	36.8	41.4	46.0	50.6	55.2	59.8
Max. Charge/Discharge Current (A) [3]	70	70	70	70	70	70
Nominal Power (kW) [5]	24.6	27.6	30.7	33.8	36.9	39.9
Max. Power (kW)	28.7	32.3	35.8	39.4	43.0	46.6
Short-circuit Current (A)	3981	3981	3981	3981	3981	3981
Battery Round-trip Efficiency (0.2 C, 25°C)	95%					
Expected Lifetime (25°C)	10 years					
Cycle Life 90% DOD (25°C)	6000 cycles					
Charge Temperature	-30°C ~ 53°C (on heating function); 0°C ~ 53°C (off heating function) [4]					
Discharge Temperature	-30°C ~ 53°C (on heating function); -20°C ~ 53°C (off heating function) [4]					
Storage Temperature	-20°C ~ 30°C (12 months), 30°C ~ 50°C (6 months)					
Relative Humidity (%)	4 ~ 100 (Condensing)					
Ingress Protection	IP66					
Protection Class	I					

Fuse Parameter

Component Type	DC Fuse
Fuse Type	EV / HEV
Rated Voltage (Vdc & Vac)	750 Vdc
Rated Current	100 A

NOTICE!

1. Test conditions: 100% DOD, 0.2 C charge & discharge @ +25°C.
2. 90% DOD; System usable energy may vary with inverter different setting.
3. Discharge: In case of battery cell's temperature range of -20°C~+5°C and +45°C~+53°C, the discharge current will be reduced;
   Charge: In case of battery cell's temperature range of 0°C~+20°C and +45°C~+53°C, the charge current will be reduced. Product charge or discharge power depends on the actual temperature of battery pack.
4. The battery can only be discharged and cannot be charged at the range of from -20°C to 0°C
5. In case of a rated current of 30 A, the wire size of 6 mm^2 for cables (including grounding cable) is recommended;
   In case of a rated current of 60 A, the wire size of 10 mm^2 for cables (including grounding cable) is recommended.

Contact Information

UNITED KINGDOM

Unit C-D Riversdale House, Riversdale Road, Atherstone, CV9 1FA
+44 (0) 2476 586 998
service.uk@solaxpower.com

AUSTRALIA

21 Nicholas Dr, Dandenong South VIC 3175
+61 1300 476 529
service@solaxpower.com.au

TURKEY

Fevzi Çakmak mah. aslım cd. no 88 A Karatay / Konya / Türkiye
service.tr@solaxpower.com

GERMANY

Am Tullnaupark 8, 90402 Nürnberg, Germany
+49 (0) 6142 4091 664
service.eu@solaxpower.com
service.dach@solaxpower.com

USA

3780 Kilroy Airport Way, Suite 200, Long Beach, CA, US 90806
+1 (408) 690 9464
info@solaxpower.com

NETHERLANDS

Twekkeler-Es 15 7547 ST Enschede
+31 (0) 8527 37932
service.eu@solaxpower.com
service.bnl@solaxpower.com

POLAND

WARSAW AL. JANA P. II 27. POST
+48 662 430 292
service.pl@solaxpower.com

SPAIN

+34 9373 79607
tecnico@solaxpower.com

ITALY

+39 011 19800998
support@solaxpower.it

BRAZIL

+55 (34) 9667 0319
info@solaxpower.com

PAKISTAN

service.pk@solaxpower.com

SOUTH AFRICA

service.za@solaxpower.com

BY SOLAX TRIPLE POWER

SolaX Power Network Technology (Zhejiang) Co., Ltd.

Add.: No. 278, Shizhu Road, Chengnan Sub-district, Tonglu County, Hangzhou, Zhejiang, China
E-mail: info@solaxpower.com

Copyright © SolaX Power Network Technology (Zhejiang) Co., Ltd. All rights reserved.

320101115702